WAGNER

Translation of the original
Operating manual

22-18S
3-130S

Edition 02/ 2009

Piston pumps

Feed volume 18 ccm, 130 ccm

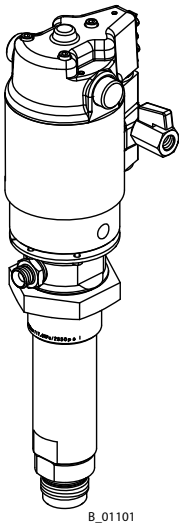

B_01101

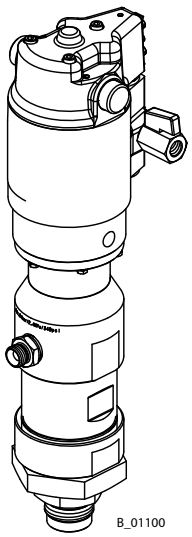

B_01100

CE

Ex II 2G IIB T3

Contents

1	**ABOUT THESE INSTRUCTIONS**	**5**
1.1	Languages	5
1.2	Warnings, notes and symbols in these instructions	5
2	**GENERAL SAFETY INSTRUCTIONS**	**6**
2.1	Safety instructions for the operator	6
2.1.1	Electrical equipment	6
2.1.2	Personnel qualifications	6
2.1.3	A safe work environment	6
2.2	Safety instructions for staff	6
2.2.1	Safe handling of WAGNER spray units	7
2.2.2	Earth the unit	7
2.2.3	Paint hoses	7
2.2.4	Cleaning	8
2.2.5	Handling hazardous liquids, varnishes and paints	8
2.2.6	Touching hot surfaces	8
2.3	Correct use	8
2.4	Use in an explosion hazard area	9
2.4.1	Correct use	9
2.4.2	Explosion protection identification	9
2.4.3	Safety instructions	9
2.5	German regulations and guidelines	10
3	**3+2 YEARS GUARANTEE FOR PROFESSIONAL FINISHING**	**12**
3.1	Scope of guarantee	12
3.2	Guarantee period and registration	12
3.3	Handling	12
3.4	Exclusion of guarantee	13
3.5	Additional regulations	13
3.6	CE-conformity	14
4	**DESCRIPTION**	**15**
4.1	Fields of application	15
4.1.1	Correct use	15
4.1.2	Processing materials	15
4.1.3	Typical applications	15
4.3	Data	16
4.3.1	Materials of paint wetted parts	16
4.3.2	Recommended V-packings	16
4.3.3	Technical data	17
4.3.4	Measurements and connections	19
4.3.5	Volume flow	20
4.3.6	Performance diagrams	20
4.4	Function	22
4.4.1	Pump	22
4.4.2	Pressure regulator unit	23
4.4.2.1	Pressure regulator unit Airless (Option)	23
4.4.2.2	Pressure regulator unit AirCoat (Option)	23

Contents

4.4.3	High-pressure filter (Option)	24
4.4.3.1	Standard high-pressure filter (Option)	24
4.4.3.2	Filter-relief combination (Option)	24
5	**START-UP AND OPERATION**	**25**
5.1	Installation and connection	25
5.1.2	Earthing	26
5.2	Start up	28
5.2.1	Safety regulations	28
5.2.2	Filling up with separating fluid	29
5.2.3	Basic cleaning	30
5.2.4	Filling with working material	30
5.3	Works	31
5.3.1	Spraying (Spraypack 22-18S)	31
5.3.2	Break in work	31
5.3.3	Shutting down and cleaning	32
5.4	Long-term storage	32
6	**TROUBLE SHOOTING, MAINTENANCE AND REPAIR**	**33**
6.1	Trouble shooting and solution	33
6.2	Maintenance	34
7	**ACCESSORIES**	**36**
7.1	Accessories for 3-130S Pump	36
7.2	Accessories for 22-18S Pump	38
7.3	Selection table TradeTip nozzles (Airless)	41
8	**SPARE PARTS**	**42**
8.1	How to order spare parts?	42
8.2	Over views modules	43
8.3	Air motor	45
8.3.1	Air motor NW75	45
8.4	Material pump	48
8.4.1	Material pump 18S	48
8.4.2	Material pump 130S	52
8.5	High-pressure filter	56
8.6	Filter-relief combination	58
8.7	Pressure regulator unit Airless	59
8.8	Pressure regulator unit AirCoat	59
8.9	Stand	60
8.10	Pneumatic carriage	61
8.11	Pneumatic carriage CH-Star with upper hopper	62

1 ABOUT THESE INSTRUCTIONS

This operating manual contains information on the operation, repair and maintenance of the unit.

→ Always observe these instructions when operating the unit.

This equipment can be dangerous if it is not operated in accordance with this manual. Compliance with these instructions constitutes an integral component of the warranty agreement.

1.1 LANGUAGES

This operating manual is available in the following languages:

Language:	Part No.	Language:	Part No.
German	2303102	English	2303668
French	2303669	Dutch	2303670
Italian	2303671	Spanish	2303672
Danish	2303673	Swedish	2303674

1.2 WARNINGS, NOTES AND SYMBOLS IN THESE INSTRUCTIONS

Warning instructions in this manual point out particular dangers to users and equipment and state measures for avoiding the hazard. These warning instructions fall into the following categories:

Danger - imminent danger. Non-observance will result in death, serious injury and serious material damage.



SIHI_0100_GB

⚠ DANGER

This line warns of the hazard !
Possible consequences of failing to observe the warning instructions. The signal word points out the hazard level.

→ The measures for preventing the hazard and its consequences.

Warning - possible danger. Non-observance can result in death, serious injury and serious material damage.



SIHI_0103_GB

⚠ WARNING

This line warns of the hazard !
Possible consequences of failing to observe the warning instructions. The signal word points out the hazard level.

→ The measures for preventing the hazard and its consequences.

Caution - a possibly hazardous situation. Non-observance can result in minor injury.



SIHI_0101_GB

⚠ CAUTION

This line warns of the hazard !
Possible consequences of failing to observe the warning instructions. The signal word points out the hazard level.

→ The measures for preventing the hazard and its consequences.

Caution - a possibly hazardous situation. Non-observance can cause material damage.

SIHI_0102_GB

CAUTION

This line warns of the hazard !
Possible consequences of failing to observe the warning instructions. The signal word points out the hazard level.

→ The measures for preventing the hazard and its consequences.

Note - provide information on particular characteristics and how to proceed.

2 GENERAL SAFETY INSTRUCTIONS

2.1 SAFETY INSTRUCTIONS FOR THE OPERATOR



→ Keep these operating instructions to hand near the unit at all times.
→ Always follow local regulations concerning occupational safety and accident prevention.

2.1.1 ELECTRICAL EQUIPMENT

Electrical plant and unit



→ To be provided in accordance with the local safety requirements with regard to the operating mode and ambient influences.
→ May only be maintained by skilled electricians or under their supervision.
→ Must be operated in accordance with the safety regulations and electrotechnical regulations.
→ Must be repaired immediately in the event of problems.
→ Must be put out of operation if they pose a hazard.
→ Must be de-energized before work is commenced on active parts. Inform staff about planned work, observe electrical safety regulations.

2.1.2 PERSONNEL QUALIFICATIONS

→ Ensure that the unit is operated and repaired only by trained persons.

2.1.3 A SAFE WORK ENVIRONMENT

→ Ensure that the floor of the working area is anti-static in accordance with EN 50053 Part 1, §7-2, measurement in accordance with DIN 51953.
→ Ensure that all persons within the working area wear anti-static shoes, e.g. shoes with leather soles.
→ Ensure that during spraying, persons wear anti-static gloves so that they are earthed via the handle of the spray gun.



→ Customer to provide paint mist extraction systems conforming to local regulations.
→ Ensure that the following components of a safe working environment are available:
  – Material/air hoses adapted to the working pressure
  – Personal safety equipment (breathing and skin protection)
→ Ensure that there are no ignition sources such as naked flame, glowing wires or hot surfaces in the vicinity. Do not smoke.

2.2 SAFETY INSTRUCTIONS FOR STAFF



→ Always follow the information in these instructions, particularly the general safety instructions and the warning instructions.
→ Always follow local regulations concerning occupational safety and accident prevention.

2.2.1 SAFE HANDLING OF WAGNER SPRAY UNITS

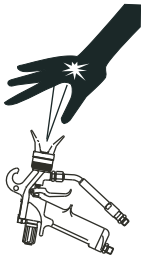

The spray jet is under pressure and can cause dangerous injuries.
Avoid injection of paint or cleaning agents:

- → Never point the spray gun at people.
- → Never reach into the spray jet.
- → Before all work on the unit, in the event of work interruptions and functional faults:
  - – Switch off the energy/compressed air supply.
  - – Secure the spray gun against actuation.
  - – Relieve the pressure from the spray gun and unit.
  - – By functional faults: Identify and correct the problem, proceed as described in chap. „Trouble shooting".

In the event of skin injuries caused by paint or cleaning agents:

- → Note down the paint or cleaning agent that you have been using.
- → Consult a doctor immediately.

Avoid danger of injury through recoil forces:

- → Ensure that you have a firm footing when operating the spray gun.
- → Only hold the spray gun briefly in any one position.

2.2.2 EARTH THE UNIT



Electrostatic charges can occur on the unit due to the electrostatic charge and the flow speed involved in spraying. These can cause sparks and flames upon discharge.

- → Ensure that the unit is always earthed.
- → Earth the work pieces to be coated.
- → Ensure that all persons inside the working area are earthed, e.g. that they are wearing antistatic shoes.
- → When spraying, wear antistatic gloves to earth yourself via the spray gun handle.

2.2.3 PAINT HOSES



- → Ensure that the hose material is chemically resistant to the sprayed materials.
- → Ensure that the material hose is suitable for the pressure generated in the unit.
- → Ensure that the following information is visible on the high-pressure hose:
  - – Manufacturer
  - – Permissible operating overpressure
  - – Date of manufacture.
- → The electrical resistance of the complete high-pressure hose must be less than 1 MOhm.

2.2.4 CLEANING

→ De-energize the unit electrically.
→ Disconnect the pneumatic supply line.
→ Relieve the pressure from the unit.
→ Ensure that the flash point of the cleaning agent is at least 5 K above the ambient temperature.
→ To clean, use only solvent-free cloths and brushes. Never use hard objects or spray on cleaning agents with a gun.



An explosive gas/air mixture forms in closed containers.
→ When cleaning units with solvents, never spray into a closed container.
→ Earth the container.

2.2.5 HANDLING HAZARDOUS LIQUIDS, VARNISHES AND PAINTS



→ When preparing or working with paint and when cleaning the unit, follow the working instructions of the manufacturer of the paints, solvents and cleaning agents being used.
→ Take the specified protective measures, in particular wear safety goggles, protective clothing and gloves, as well as hand protection cream if necessary.
→ Use a mask or breathing apparatus if necessary.
→ For sufficient health and environmental safety: Operate the unit in a spray booth or on a spraying wall with the ventilation (extraction) switched on.
→ Wear suitable protective clothing when working with hot materials.

2.2.6 TOUCHING HOT SURFACES



→ Touch hot surfaces only if you are wearing protective gloves.
→ When operating the unit with a coating material with a temperature of >43°C; 109.4°F:
- Identify the unit with a warning label that says „Warning - hot surface“.

Order No.
9998910 Information label
9998911 Safety label

2.3 CORRECT USE



WAGNER accepts no liability for any damage arising from incorrect use.
→ Use the unit only to work with the materials recommended by WAGNER.
→ Operate the unit only as an entire unit.
→ Do not deactivate safety equipment.
→ Use only WAGNER original spare parts and accessories.

2.4 USE IN AN EXPLOSION HAZARD AREA

2.4.1 CORRECT USE

The unit is suitable for working liquid materials in accordance with the classification into explosion classes.

2.4.2 EXPLOSION PROTECTION IDENTIFICATION

As defined in the Directive 94/9/CE (ATEX 95), the unit is suitable for use in areas where there is an explosion hazard.



CE Ex II 2G IIB T3

CE: Communautés Européennes
Ex: Symbol for explosion protection
II: Unit class II
2: Category 2 (Zone 1)
G: Ex-atmosphere gas
IIB: Explosion class
T3: Temperature class: maximum surface temperature < 200°C; 392°F.

2.4.3 SAFETY INSTRUCTIONS

Safe handling of WAGNER spray units

The maximum surface temperature of the piston pump can be reached if it runs dry.
→ Ensure that the piston pump is filled with sufficient working or cleaning medium.
→ Ensure that the separating agent container is filled with sufficient separating agent.

Mechanical sparks can form if the unit comes into contact with metal.
In an explosive atmosphere:
→ Do not knock or push the unit against steel or rusty iron.
→ Do not drop the unit.
→ Use only tools that are made of a permitted material.

Ignition temperature of the coating material
→ Ensure that the ignition temperature of the coating material is above the maximum surface temperature.

Medium supporting atomizing
→ To atomize the material, use only weakly oxidizing gases, e.g. air.

Surface spraying, electrostatic

→ Do not spray unit parts with electrostatic (e.g. electrostatic spray gun).



Cleaning

If there are deposits on the surfaces, the unit may form electrostatic charges. Flames or sparks can form if there is a discharge.

→ Remove deposits from the surfaces to maintain conductivity.

→ Use only a damp cloth to clean the unit.



2.5 GERMAN REGULATIONS AND GUIDELINES

a)	BGV D15	Working with liquid ejection devices
b)	BGV D25	Using coating materials
c)	CHV 9	Regulations on flammable liquids
d)	BGR 104	Explosion protection rules
e)	BGR 132	Avoiding ignition risks
f)	BGR 180	Setting up for cleaning with solvents for cleaning workpieces with solvents
g)	ZH 1/406	Guidelines for liquid ejection devices
h)	BGI 740	Painting rooms and equipment

Note: All titles can be ordered from Heymanns Publishing House in Cologne or download from Internet.

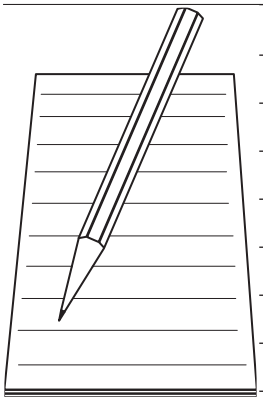

3 3+2 YEARS GUARANTEE FOR PROFESSIONAL FINISHING

3.1 SCOPE OF GUARANTEE

All Wagner professional colour application devices (hereafter referred to as products) are carefully inspected, tested and are subject to strict checks under Wagner quality assurance. Wagner exclusively issues extended guarantees to commercial or professional users (hereafter referred to as „customer") who have purchased the product in an authorised specialist shop, and which relate to the products listed for that customer on the Internet under www.wagner-group.com/profi-guarantee.
The buyer's claim for liability for defects from the purchase agreement with the seller as well as statutory rights are not impaired by this guarantee.
We provide a guarantee in that we decide whether to replace or repair the product or individual parts, or take the device back and reimburse the purchase price. The costs for materials and working hours are our responsibility. Replaced products or parts become our property.

3.2 GUARANTEE PERIOD AND REGISTRATION

The guarantee period amounts to 36 months. For industrial use or equal wear, such as shift operations in particular, or in the event of rentals it amounts to 12 months.
Systems driven by petrol or air are also guaranteed for a 12 month period.
The guarantee period begins with the day of delivery by the authorised specialist shop. The date on the original purchase document is authoritative.
For all products bought in authorised specialist shops from 01.02.2009 the guarantee period is extended to 24 months providing the buyer of these devices registers in accordance with the following conditions within 4 weeks of the day of delivery by the authorised specialist shop. Registration can be completed on the Internet under
www.wagner-group.com/profi-guarantee.
The guarantee certificate is valid as confirmation, as is the original purchase document that carries the date of the purchase. Registration is only possible if the buyer is in agreement with having the data being stored that is entered during registration.
When services are carried out under guarantee the guarantee period for the product is neither extended nor renewed.
Once the guarantee period has expired, claims made against the guarantee or from the guarantee can no longer be enforced.

3.3 HANDLING

If defects can be seen in the materials, processing or performance of the device during the guarantee period, guarantee claims must be made immediately, or at the latest within a period of 2 weeks.
The authorised specialist shop that delivered the device is entitled to accept guarantee claims. Guarantee claims may also be made to the service centres named in our operating instructions. The product has to be sent without charge or presented together with the original purchase document that includes details of the purchase date and the name of the product. In order to claim for an extension to the guarantee, the guarantee certificate must be included.
The costs as well as the risk of loss or damage to the product in transit or by the centre that accepts the guarantee claims or who delivers the repaired product, are the responsibility of the customer.

3.4 EXCLUSION OF GUARANTEE

Guarantee claims cannot be considered
- for parts that are subject to wear and tear due to use or other natural wear and tear, as well as defects in the product that are a result of natural wear and tear, or wear and tear due to use. This includes in particular cables, valves, packaging, jets, cylinders, pistons, means-carrying housing components, filters, pipes, seals, rotors, stators, etc. Damage due to wear and tear that is caused in particular by sanded coating materials, such as dispersions, plaster, putty, adhesives, glazes, quartz foundation.
- in the event of errors in devices that are due to non-compliance with the operating instructions, unsuitable or unprofessional use, incorrect assembly and/or commissioning by the buyer or by a third party, or utilisation other than is intended, abnormal ambient conditions, unsuitable coating materials, unsuitable operating conditions, operation with the incorrect mains voltage supply/frequency, over-operation or defective servicing or care and/or cleaning.
- for errors in the device that have been caused by using accessory parts, additional components or spare parts that are not original Wagner parts.
- for products to which modifications or additions have been carried out.
- for products where the serial number has been removed or is illegible
- for products to which attempts at repairs have been carried out by unauthorised persons.
- for products with slight deviations from the target properties, which are negligible with regard to the value and usability of the device.
- for products that have been partially or fully taken apart.

3.5 ADDITIONAL REGULATIONS

The above guarantees apply exclusively to products that have been bought by authorised specialist shops in the EU, CIS, Australia and are used within the reference country.

If the check shows that the case is not a guarantee case, repairs are carried out at the expense of the buyer.
The above regulations manage the legal relationship to us concludingly. Additional claims, in particular for damages and losses of any type, which occur as a result of the product or its use, are excluded from the product liability act except with regard to the area of application.
Claims for liability for defects to the specialist trader remain unaffected.
German law applies to this guarantee. The contractual language is German. In the event that the meaning of the German and a foreign text of this guarantee deviate from one another, the meaning of the German text has priority.

J. Wagner GmbH
Division Professional Finishing
Otto Lilienthal Strasse 18
88677 Markdorf
Federal Republic of Germany

Wagner professional guarantee
(Status 01.02.2009)

3.6 CE-CONFORMITY

CE

Herewith we declare that the supplied version of

Pneumatic pumps and their spray packs		
Type	22-18S	3-130S

Complies with the following guidelines:

98/37/EG
94/9/EG (Atex-directives)

Applied standards, in particular:

DIN EN ISO 12100-1	DIN EN 563	DIN EN ISO 3746	DIN EN 1127-1	DIN EN 13463
DIN EN ISO 12100-2	DIN EN 809	DIN EN 1050	pr DIN EN 12621	

Applied national technical standards and specifications, in particular:

BGV D 25 (VBG 23)	BGR 104	BGR 132 (ZH 1/200)

Marking:

CE Ex **II 2G IIB T3**

CE Certificate of Conformity
The certificate is enclosed with this product. The certificate of conformity can be reordered from your WAGNER representative, quoting the product and serial number.

Part number:
105915 -> for piston pumps 22-18S and 3-130S

4 DESCRIPTION

4.1 FIELDS OF APPLICATION

4.1.1 CORRECT USE

The pneumatic piston pump is suitable for process liquid materials according chapter 4.1.2.

4.1.2 PROCESSING MATERIALS

Application	22-18S	3-130S
Water based lacquers and paints	↗	↗
Solvent based lacquers and paints	↗	↗
Primers	➟	➟
Epoxy and polyurethane paints and lacquers	↗	↗
Synthetic materials	↘	➟
Wax based underseal	↘	↘

Legend:
Recommended ↗ limited suitability ➟ less suitable ↘

CAUTION

Abrasive materials and pigments!
Greater wear of the parts carrying the material

→ Do not use any grainy and abrasive materials with large, sharp-edged pigments.
→ Use suitable combinations of devices (packages, valves etc.).

SIHI_0011_GB

4.1.3 TYPICAL APPLICATIONS

Application	22-18S	3-130S
Furniture industry	↗	↗
Kitchen manufacturers	↗	↗
Joinery	↗	↗
Window factories	➟	➟
Steel fabrication	↘	➟
Construction of vehicles	↗	↗
Offshore	↘	↘

Legend:
Recommended ↗ limited suitability ➟ less suitable ↘

4.3 DATA

4.3.1 MATERIALS OF PAINT WETTED PARTS

Housing	Stainless steel
Piston	Stainless steel and hard chrome
Valve balls	Stainless steel
Valves seats	Stainless steel
O-ring	Teflon
V-packings	Standard PE/ TG

PE = Polyethylen UHMW
TG = Teflon (PTFE) with graphite

4.3.2 RECOMMENDED V-PACKINGS

Wagner V-packings are manufactured in four different materials:

Code	Material	Colour
L	Leather	dark brown
TG	Teflon with graphite	black
PE	Polyethylen UHMW	transparent
T	Teflon	white

Each material has the following properties, which influence the packings:

	L	TG	PE	T
Mechanical stability	low	good	good	low
Coefficient of friction	low	very good	good	very good
Sealing capacity	good*	good	good	good
Chemical resistance or reactivity	low	good	very good	very good
Temperature stability	good	low - good	very good	low

* for abrasive materials

Standard combinations

Standard pneumatic pumps	PE/TG
Heavy duty (HP) pumps	PE/L
Hardener pump in 2C-Systems	PE/T

4.3.3 TECHNICAL DATA

Description	Units	22-18S	3-130S
Transmission ratio		22 :1	3 : 1
Flow volume per double stroke (DS)	cm³ cc	18	130
Maxi. operating pressure	MPa bar psi	17.6 176 2550	2.4 24 348
Maxi. possible strokes in operation	DS/min	60	60
Min. - Maxi. air inlet pressure	MPa bar psi	0.25-0,8 2.5-8 36-116	0.25-0,8 2.5-8 36-116
Ø air inlet connection (female)	Zoll Inch	R 1/4“	R 1/4“
Min. Ø compressed air hose	mm Inch	9 0.35	9 0.35
Air consumption at 0.6 MPa; 6 bar; 87 psi per DS	nl scf	3 0.11	3 0.11
Sound pressure level at maxi. permissible air pressure*	dB(A)	80	
Sound pressure level at 0.6 MPa; 6 bar; 87 psi air pressure*	dB(A)	75	
Sound pressure level at 0.4 MPa; 4 bar; 58.01 psi air pressure*	dB(A)	70	
Ø piston of air motor	mm Inch	75 3	75 3
Ø material inlet connection (male)		M36x2	M36x2
Ø material outlet connection (male)		NPSM 3/8“ / NPS 1/4“ / M16x1.5	
Weight	kg lb	5.1 11.2	6.6 14.5
pH range of the material	pH	3.5 ÷ 9	
Maxi. material pressure at pump inlet	MPa bar psi	2 20 290	
Material temperature	°C °F	+5 ÷ +80 +41 ÷ +176	

Technical data

Description	Units	22-18S	3-130S
Ambient temperature	°C °F	+5 ÷ +60 +41 ÷ +140	
Allowable sloping position at work	∢ °	± 10	

* A rated sound pressure level measured at 1m distance according to DIN EN ISO 3746-1995.

Reference measurements have been made by SUVA (Swiss accident insurance institute).



⚠WARNING

Outgoing air containing oil!
Risk of poisoning if inhaled

→ Provide water-free and oil-free compressed air (quality standard 5.5.4 as per ISO 8573.1) 5.5.4 = 40 µm / +7 / 5 mg/m³.

SIHI 0023 GB

4.3.4 MEASUREMENTS AND CONNECTIONS

22-18S
mm (inch)

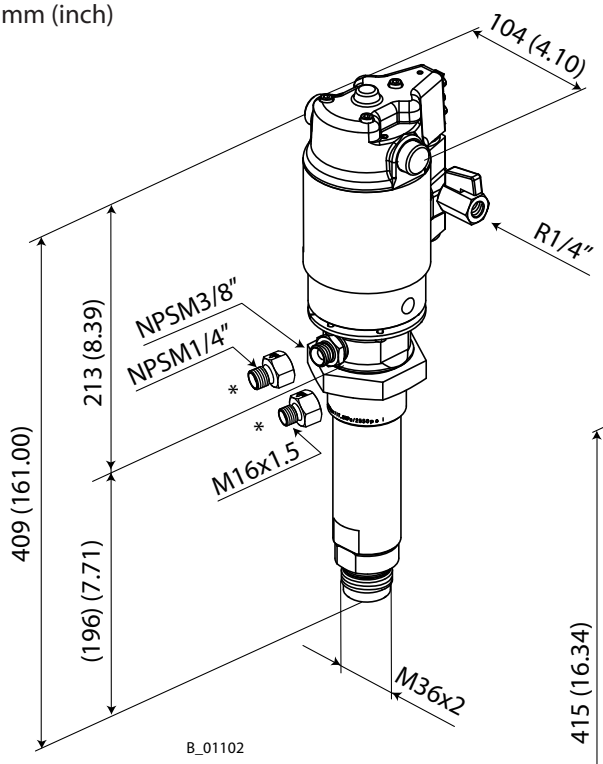

* The adapters are components of the basic equipment

3-130S
mm (inch)

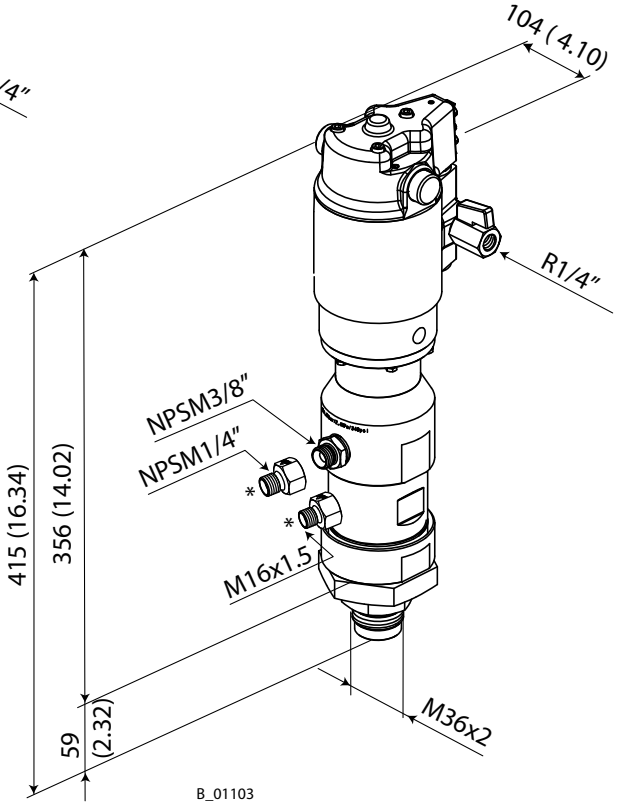

Wall mounting
mm (inch)

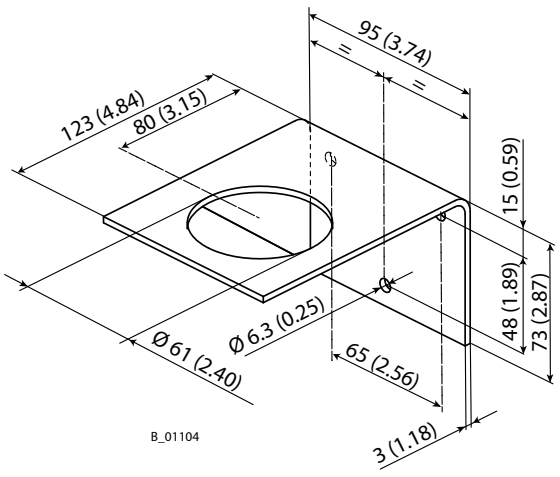

4.3.5 VOLUME FLOW

Wagner AL - nozzles			Volume flow in l/ min.*			
ø inch	ø mm	Spray angel	at 7 MPa 70 bar 1015 psi	at 10 MPa 100 bar 1450 psi	at 15 MPa 150 bar 2175 psi	
0.007	0.18	40°	0.1650	0.2000	0.2400	
0.009	0.23	20-30-40-50-60°	0.2060	0.2500	0.3090	22-18S
0.011	0.28	10-20-30-40-50-60°	0.2950	0.3450	0.4260	
0.013	0.33	10-20-30-40-50-60-80°	0.4530	0.5280	0.6600	
0.015	0.38	10-20-30-40-50-60-80°	0.5770	0.6720	0.8130	
0.017	0.43	20-30-40-50-60-70°	0.7310	0.7860	1.0640	
0.019	0.48	20-30-40-50-60-70-80°	0.9260	1.0920	1.3700	
0.021	0.53	20-40-50-60-80°	1.1430	1.3600	1.6900	
0.023	0.58	20-40-50-60-70-80°	1.3700	1.5900	2.0100	
0.025	0.64	20-40-50-60-80°	1.6200	1.9100	2.4000	
0.027	0.69	20-40-50-60-80°	1.8300	2.1300	2.6800	
0.029	0.75	60°	2.1900	2.5100	3.1700	
0.031	0.79	20-40-50-60°	2.4000	2.7700	3.4900	
0.035	0.90	20-40-50-60°	3.2200	3.7400	4.6900	
0.043	1.10	20-50°	5.0700	6.0400	7.4600	
0.052	1.30	50°	5.1200	6.5000	7.5200	

* Flow volume refers to water.
Maximum ranges for continuous operation at 60 DS/min.

4.3.6 PERFORMANCE DIAGRAMS

Example

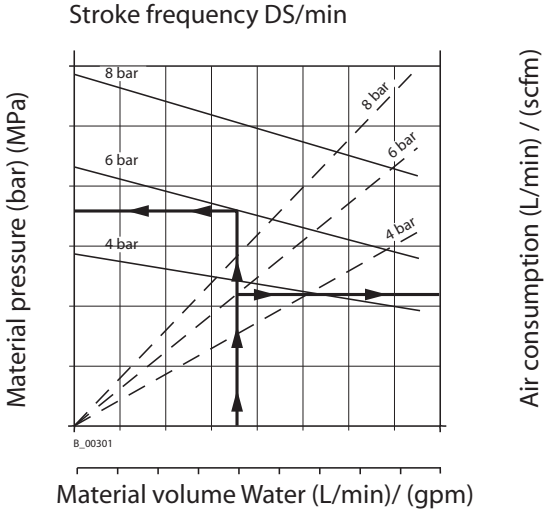

Diagram for 22-18S

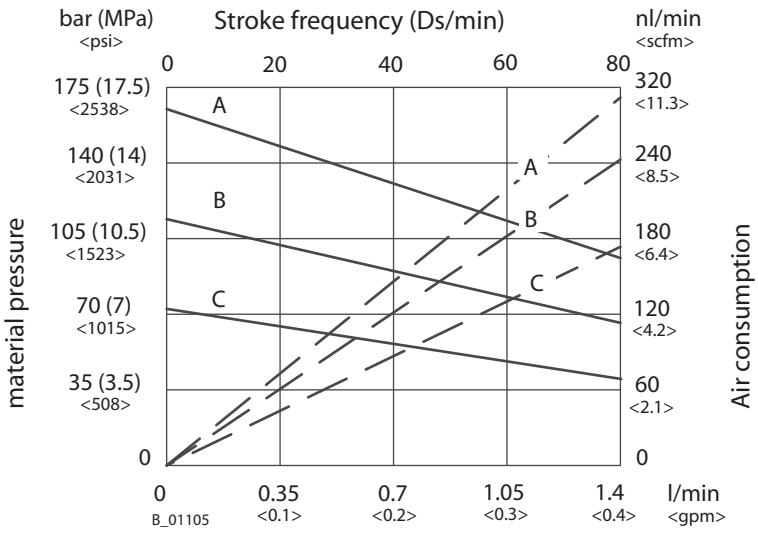

Material volume Water
A = 8 bar (0.8 MPa / 116 psi)
B = 6 bar (0.6 MPa / 87 psi)
C = 4 bar (0.4 MPa / 58 psi)

Diagram for 3-130S

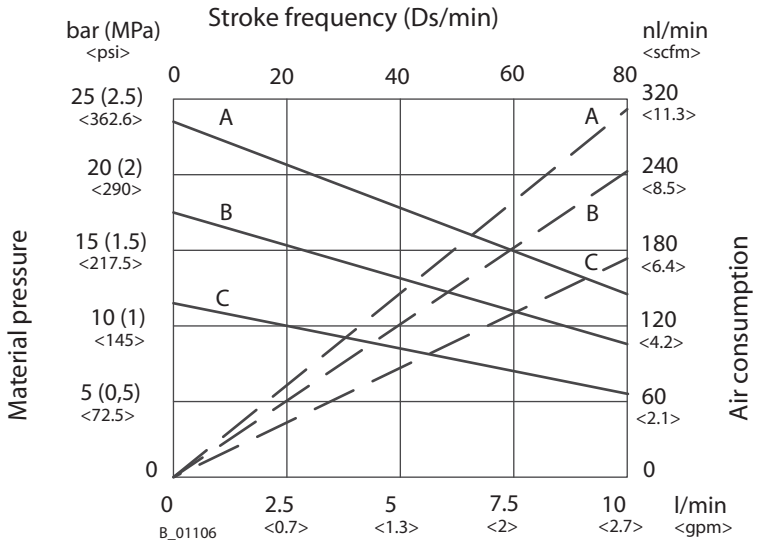

Material volume Water
A = 8 bar (0.8 MPa / 116 psi)
B = 6 bar (0.6 MPa / 87 psi)
C = 4 bar (0.4 MPa / 58 psi)

4.4 FUNCTION

4.4.1 PUMP

1 Air motor
2 Material pump
3 Compressed air connection
4 Material inlet connection
5 Material outlet connection
6 Separating agent filling orifice
7 Earthing connection
8 Ball valve

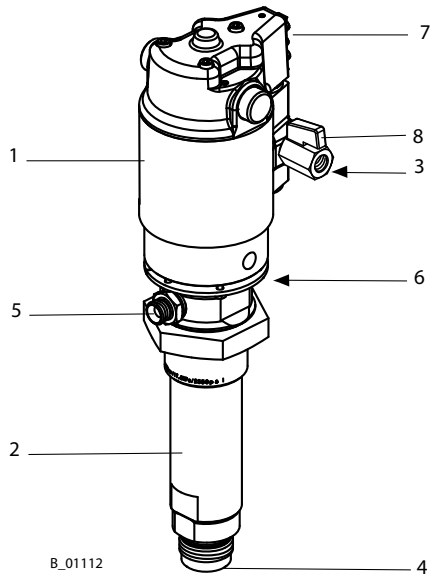

General
The piston pump is driven with compressed air. This compressed air moves up and down the air piston in the air motor (4) and thus also the pump piston in the material pump (9). At the end of each stroke the compressed air is redirected by a change over valve and the control piston.
Working materials are sucked in on the upward stroke and simultaneously conveyed to the gun in both strokes.

Air motor (1)
The air motor with its pneumatic reverse does not require pneumatic oil.
The air motor must be fitted with a safety valve (see pressure regulator units in chapter 4.4.2). The safety valve has been set and sealed at the factory. With pressures over and above the permissible operating pressure the valve, which is held with a spring, automatically opens and releases the excess pressure.



⚠WARNING

Overpressure!
Risk of injury from bursting components

→ Never change the safety valve setting.

SIHI_0026_GB

Material pump (2)
The material pump has been designed as a piston pump with exchangeable ball valves. The hard chrome-plated pump piston runs in two fixed packings (22-18S) or in one fixed packing and in one running packing (3-130S) which are self-adjusting by means of a pressure spring, thus resulting in a long life-span.
Between the air motor and material pump there is a filler boring for separating fluid (6).

4.4.2 PRESSURE REGULATOR UNIT

4.4.2.1 PRESSURE REGULATOR UNIT AIRLESS (OPTION)

Part No. 117270 (see chapter 7)



⚠WARNING

Overpressure!
Risk of injury from bursting components

→ Never change the safety valve setting.

SIHI_0026_GB

Thread secured with Loctite 270.
Part No. 9992528 (50 ml; 50 cc)

Air motor

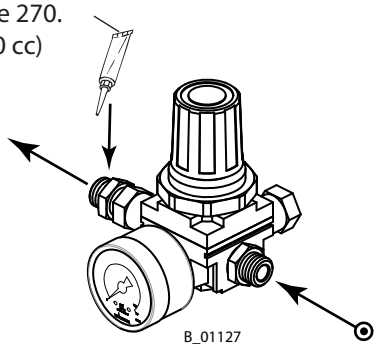

B_01127

4.4.2.2 PRESSURE REGULATOR UNIT AIRCOAT (OPTION)

Part No. 117275 (see chapter 7)



⚠WARNING

Overpressure!
Risk of injury from bursting components

→ Never change the safety valve setting.

SIHI_0026_GB

Thread secured with Loctite 270.
Part No. 9992528 (50 ml; 50 cc)

Air motor

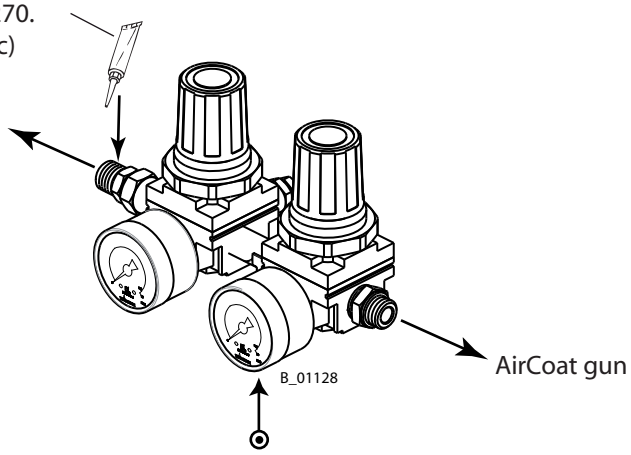

B_01128

AirCoat gun

4.4.3 HIGH-PRESSURE FILTER (OPTION)

4.4.3.1 STANDARD HIGH-PRESSURE FILTER (OPTION)

To ensure problem-free operation it is recommended that a WAGNER high-pressure filter is used. These have been developed especially for the respective pneumatic pumps. These have been developed especially for the respective pneumatic pumps. The filter inserts can be ex-changed depending on the material to be used.
You will find the respective high pressure filters and their inserts for the device in the accessory list. (Chapter 8.5)

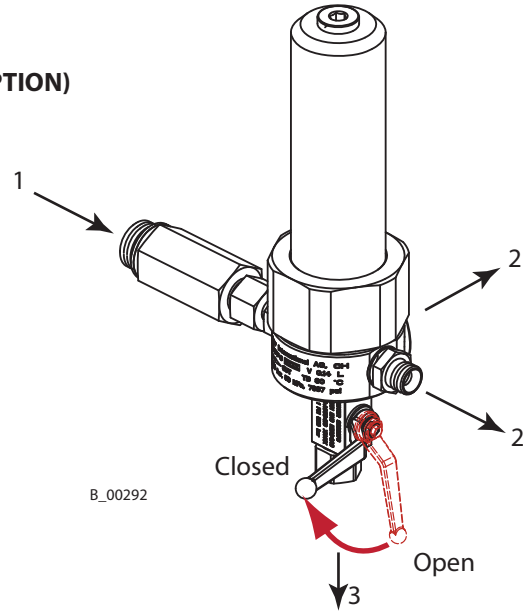

1 Connection, material pump
2 Two material outlets
3 Return

Preferred installation position

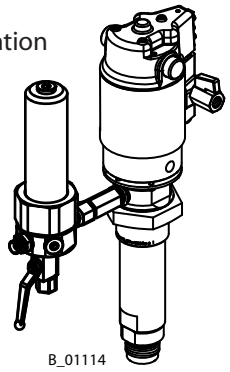

Installation position with filter housing at down is also possible

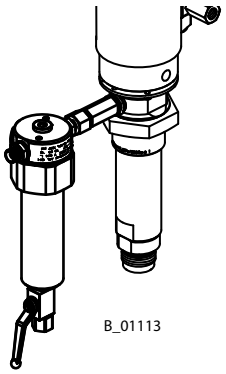

4.4.3.2 FILTER-RELIEF COMBINATION (OPTION)

Instead of the standard filter the advantageously filter-relief combination can be used if only a small volume of material will be delivered.

The filter inserts can be ex-changed depending on the material to be used. You will find the respective high pressure filters and their inserts for the device in the accessory list. (Chapter 8.6)

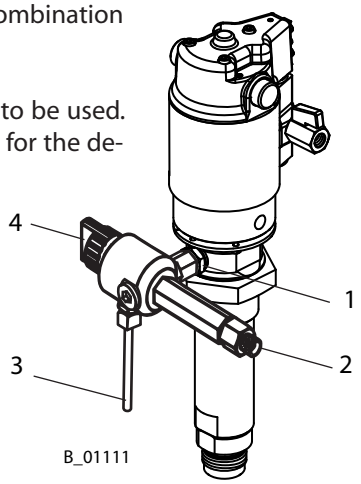

1 Connection, material pump
2 Material outlet connection
3 Return
4 Relief valve

5 START-UP AND OPERATION

5.1 INSTALLATION AND CONNECTION

Note
This pump can be used as part of a spraying system for Airless or AirCoat applications. The individual components are shown in the accessories, or can be arranged with a spraypack configurator.
The nozzles must be selected according to the gun instructions.

Procedure (possible spray pack variants):

1. Assemble the pump on a stand, a trolley (1) or wall mounting (with spray pack orders are already pumps on trolley or on stands premounted by the factory).
2. Fit pressure regulator unit for Airless or AirCoat (2). Thread into the air inlet for pump secure with Loctite 270.
3. Fit filter-relief combination (3) or high-pressure filter (3).
4. Fit suction system (4) or upper hopper.
5. Fit return tube (5).
6. Connect high-pressure hose and gun (6) as laid down in the gun-operating manual.

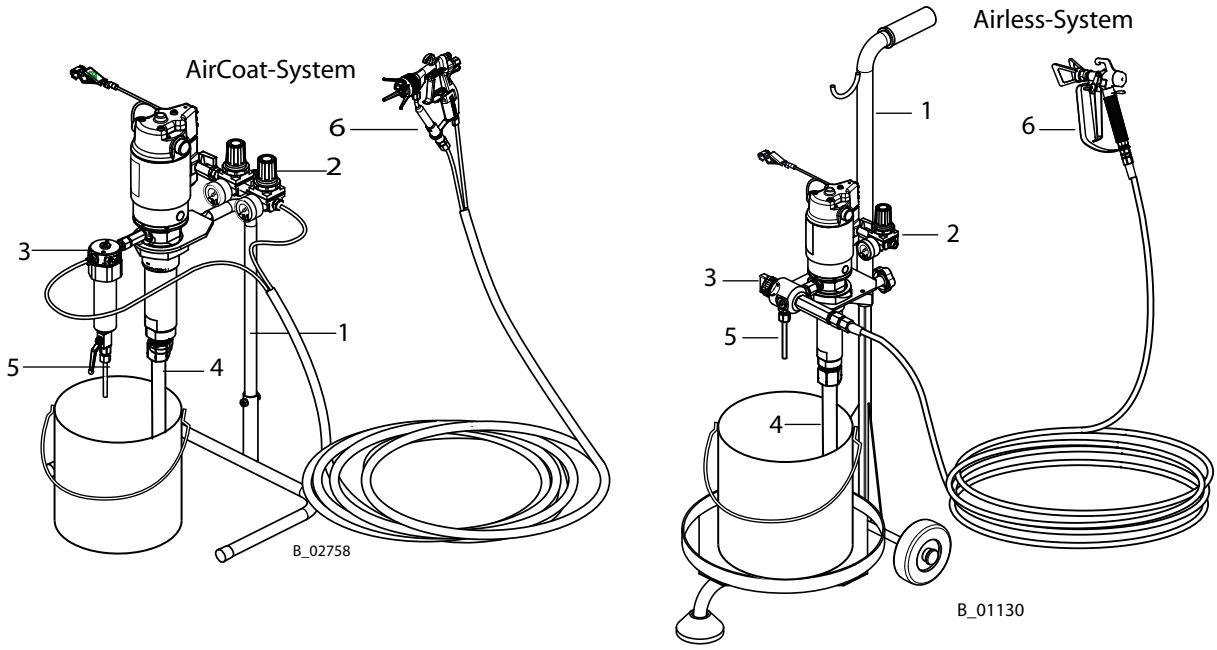

	⚠WARNING
	Inclined surface! Risk of accidents if the unit rolls away/falls → Position the carriage with the piston pump horizontally. → If the surface is inclined, position the feet of the carriage towards the gradient. → Secure the carriage.

SIHI_0012_GB

5.1.2 EARTHING



⚠WARNING

Discharge of electrostatically charged components in atmospheres containing solvents!
Explosion hazard from electrostatic sparks

→ Clean the piston pump only with a damp cloth.

SIHI_0041_GB



⚠WARNING

Heavy paint mist if earthing is insufficient!
Risk of poisoning
Insufficient paint application quality

→ Earth all unit components.
→ Earth the workpieces being painted.

SIHI_0003_GB

Earthing schema (example)

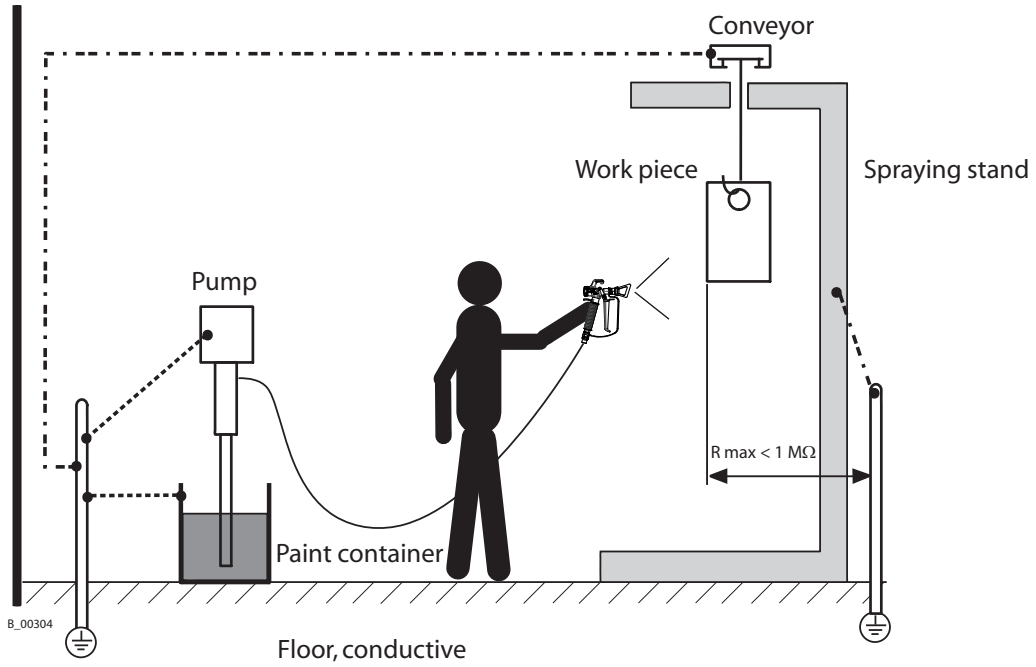

Cable cross sections

Pump	4 mm²; AWG 11
Paint container	6 mm²; AWG 10
Conveyor	16 mm²; AWG 5
Spraying boot	16 mm²; AWG 5
Spraying stand	16 mm²; AWG 5

Procedure:

1. Fasten the cable lug of the earthing cable on the air motor.
2. Clamp the earthing cable clip to a earth connection on site.
3. Earth the paint container to a local earth connection.
4. Earth the other parts of the system to a local earth connection.

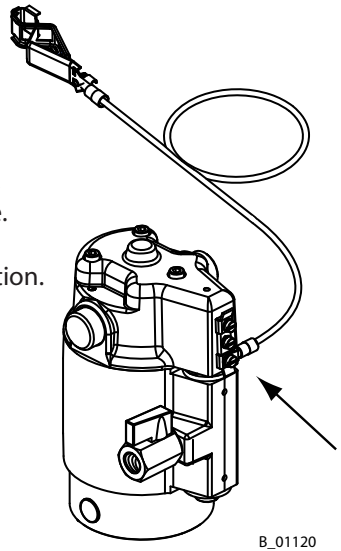

B_01120

5.2 START UP

5.2.1 SAFETY REGULATIONS

Every time before starting up the following points should be observed as laid down in the operating instructions:
- That it is possible to observe the safety regulations in chap. 2.
- The starting up procedure, has been carried out properly.

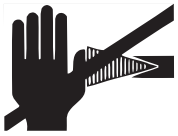

⚠WARNING

High-pressure spray jet!
Danger to life from injecting paint or solvent

→ Never reach into the spray jet.
→ Never point the spray gun at people.
→ Consult a doctor immediately in the event of skin injuries caused by paint or solvent. Inform the doctor about the paint or solvent used.
→ Never seal defective high-pressure parts, instead relieve the pressure from them and replace.

SIHI_0016_GB



⚠WARNING

Toxic and/or flammable vapor mixtures!
Risk of poisoning and burns

→ Operate the unit in a spraying booth approved for the working materials.
-or-
→ Operate the unit on an appropriate spraying wall with the ventilation (extraction) switched on.
→ Observe national and local regulations for the outgoing air speed.

SIHI_0028_GB



⚠WARNING

Gas mixtures can explode if there is an incompletely filled pump!
Danger to life from flying parts

→ Ensure that the piston pump and suction system are always completely filled with cleaning agent or working medium.
→ Do not spray the unit empty after cleaning.

SIHI_0025_GB

Before every start-up, the following points should be observed as laid down in the operating manual:

- Secure gun with safety catch
- Check the permissible pressures
- Check all connections for leaks
- Check hose for damage

It should be ensured that the unit is in the following state before carrying out any work on it:

- The pressure should be released from the pump and high-pressure hose with gun.
- The gun should be secured with safety catch.
- The air supply should be interrupted.

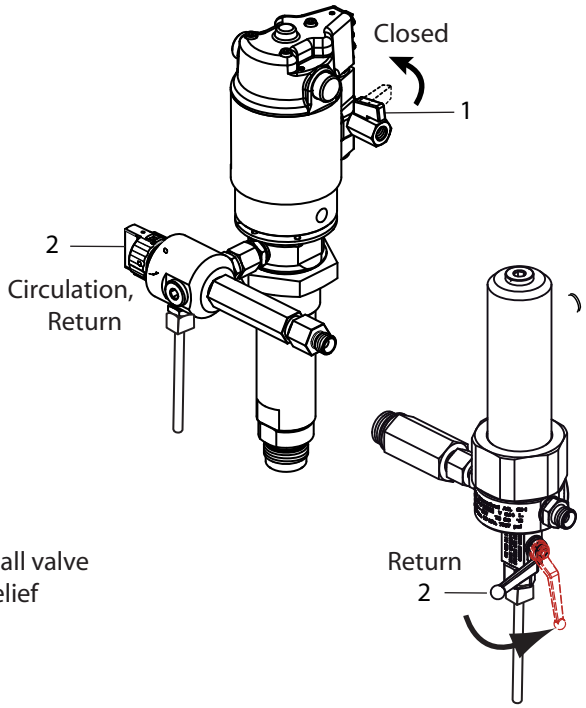

Emergency Stop
In the case of unforeseen occurrences the ball valve (1) should be closed immediately and the relief valve (2) should be on circulation mode.

5.2.2 FILLING UP WITH SEPARATING FLUID

CAUTION

Piston pump dry run!
High wear/damage to the packages
Paint or solvent can escape if the seals are dry

→ Ensure that the separating fluid container is filled with sufficient separating fluid. Filling level 1 cm; 0.4 inches under the pot edge.

SIHI_0018_GB

Place the supplied separating fluid into the filling orifice (arrow).
Filling level: Drive piston of the material pump on upper reverse points and then fill separating fluid in to this are visible.
Separating fluid: Part No. 9992504 (bottle 0.25 l)

Note
Maxi. allowed leaning angle of the pump after filling up with separating fluid: ±10°.

22-18S

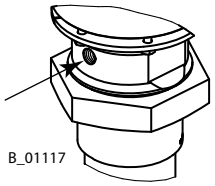

3-130S

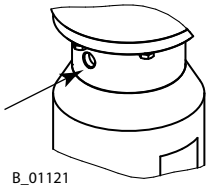

5.2.3 BASIC CLEANING

1. Place suction hose (7) in a container with solvent (6).
2. Place empty container (5) under return tube (4).
3. Open return valve (3).
4. Adjust the air pressure on the pressure regulator (1) so that the pump runs regularly.
5. Rinse the system until clean solvent flows into the container (5).
6. Close return valve (3).
7. Point the gun, without nozzle, into container (5) and open it.
8. Rinse until clean solvent flows from the gun.
9. Adjust the air pressure on the pressure regulator (1) on 0 bar.
10. When there is no pressure remaining in the system close gun.
11. Secure gun.
12. Dispose of the contents of the container (5) according to the local regulations.

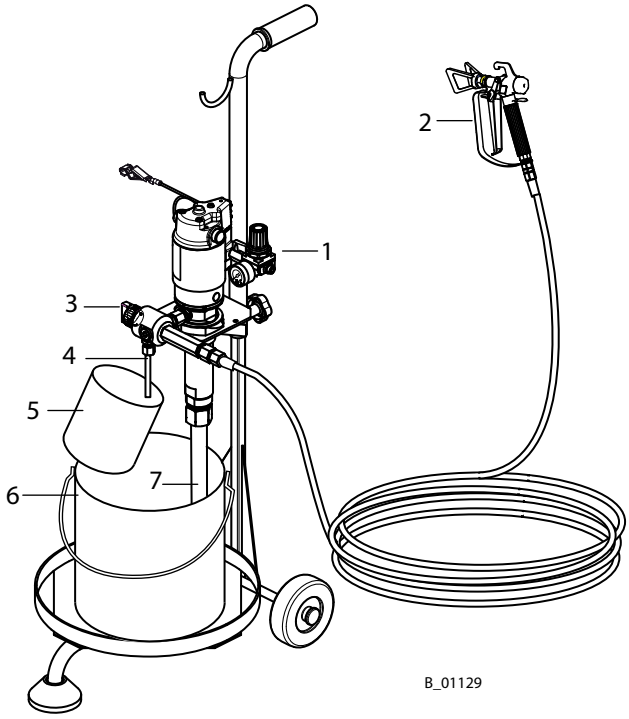

5.2.4 FILLING WITH WORKING MATERIAL

1. Place suction hose (7) in the container with working material (6).

   Note:
   If the pump is equipped with a rigid suction system, it should only be diped in into the working material in maximum to the middle of the inlet housing.

2. Place empty container (5) under return tube (4).
3. Open return valve (3).
4. Adjust the air pressure on the pressure regulator (1) so that the pump runs regularly.
5. Close ball valve (3) as soon as pure working material starts coming from the return hose (4).
6. Point the gun, without nozzle (2) into container (5) and open it.
7. Adjust the air pressure on the pressure regulator (1) on 0 bar, as soon as pure working material starts coming from the gun.
8. When there is no pressure remaining in the system close gun.
9. Secure gun.
10. Dispose of the contents of the container (5) according to the local regulations

5.3 WORKS

5.3.1 SPRAYING (SPRAYPACK 22-18S)

1. Secure Airless gun (2) or AirCoat gun and place the appropriate nozzle in the gun instructions.
2. Set required working pressure on the pressure regulator (1).
3. Optimize the spraying results as laid down in the gun instructions.
4. Start work process.

5.3.2 BREAK IN WORK

1. Close gun.
2. Adjust the air pressure on the pressure regulator (1) on 0 bar.
3. Release the system by opening the gun.
4. Close and secure gun.

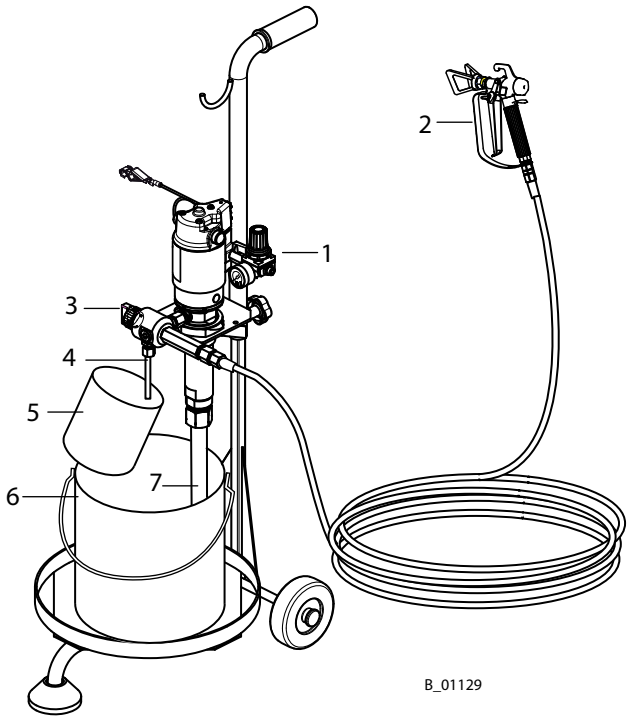

⚠ WARNING

Hardened material in the spraying system when 2-component material is worked!
Destruction of the pump and injection system

→ Follow the manufacturer's working instructions, particularly regarding the pot life.
→ Rinse thoroughly before the end of the pot life.

SIHI_0013_GB

5.3.3 SHUTTING DOWN AND CLEANING

Note
The device should be cleaned for maintenance purposes, etc. Ensure that no remaining material dries and sticks.

Procedure:
1. Breaks in work -> Paragraph 5.3.2, carry out.
2. Carry out the basic cleaning -> Paragraph 5.2.3.
3. Maintain the gun as laid down in the operating instructions.
4. Clean and check the suction system and, in particular, the suction filter.
5. When using a high-pressure filter: Clean and check the filter insert and filter body.
6. Clean the outside of the system.



⚠WARNING

Brittle filter pressure regulator!
The container on the filter pressure regulator becomes brittle through contact with solvents and can burst
Flying parts can cause injury

→ Do not clean the container on the pressure regulator with solvent.

SIHI_0014_GB

7. Put the whole system back together.
8. Check the level of the separating fluid -> Paragraph 5.2.2.
9. Fill the system with solvent as laid down in Paragraph 5.2.4 „Filling with working material".



⚠WARNING

Gas mixtures can explode if there is an incompletely filled pump!
Danger to life from flying parts

→ Ensure that the piston pump and suction system are always completely filled with cleaning agent or working medium.
→ Do not spray the unit empty after cleaning.

SIHI_0025_GB

5.4 LONG-TERM STORAGE

If storing the system for a prolonged period of time, thorough cleaning and corrosion protection are necessary. Replace the water or solvent in the material pump with a suitable preserving oil. Fill separating fluid cup with separating fluid.

Procedure:
1. Carry out Paragraph 5.3.3 „Shutting down and cleaning", points 1 through 9.
2. Cleaning with preserving agent acc. Paragraph 5.2.3.
3. Protect the air motor with pneumatic oil: connect an oiler to the compressed air inlet and run for a few double strokes.

6 TROUBLE SHOOTING, MAINTENANCE AND REPAIR

6.1 TROUBLE SHOOTING AND SOLUTION

Problem	Cause	Remedy
The pump does not work	Air motor does not work or stops	Disconnect compressed air supply shortly
	No pressure indication (pressure regulator defect)	Disconnect compressed air supply shortly or repair or change pressure regulator
	Spray nozzle is clogged	Clean nozzle as laid down in the instructions
	Insufficient supply of compressed air	Check compressed air supply
	Filter insert in spray gun or high-pressure filter is clogged	Clean the parts and use an appropriate spraying material
	Material feed pump or high-pressure hose are blocked (e.g., two-component material hardened)	Dismantle the paint pump and clean, replace high-pressure hose
Poor spray pattern	See gun instructions	
Irregular operation of material feed pump: spray jet collapses (pulsation)	Viscosity to high	Dilute working material
	Spraying pressure to low	Increase incoming air pressure, use smaller nozzle
	Valve stuck	Clean material pump, if necessary leave to soak in solvent
	Foreign body in suction valve	Dismantle suction valve housing, clean and check valve seat
	Diameter of the compressed air line too small	Assemble a larger incoming line - >technical data, paragraph 4.3.3
	Valves, packings or pistons worn	Replace parts
Pump runs evenly, however does not suck up material	Union nut of the suction system is loose, pump is taking in air	Tighten
	Suction filter clogged	Clean filter
	Ball in suction or piston valve is sticking	Clean with solvent (if necessary vent device)
Pump runs when the gun is closed	Packings, valves, pistons wor	Replace parts
Air motor iced up	A lot of condensation water in the air supply.	Install a water separator.

If the problem is not listed above consult your WAGNER Service Center.

6.2 MAINTENANCE



⚠WARNING

Incorrect maintenance/repair!
Danger to life and equipment damage

→ Only a WAGNER service center or a suitably trained person may carry out repairs and replace parts.
→ Only repair and replace parts that are listed in the chapter "Spare parts catalog".
→ Before all work on the unit and in the event of work interruptions:
- Disconnect the control unit from the mains.
- Relieve the pressure from the spray gun and unit.
- Secure the spray gun against actuation.
→ Observe the operating and service instructions when carrying out all work.

SIHI_0048_GB

1. Check the level of separating fluid every day, and top up if necessary.
2. Check and clean the high-pressure filter or the filter discharge combination every day or as required.
3. Every shut down should be carried out as laid down in paragraph 5.3.3!
4. Check and replace if necessary hoses, tubes, couplings every days.

WAGNER recommends to check the whole spray system every year from a technical expert (e.g. WAGNER service technician).

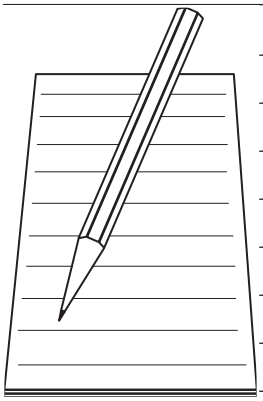

7 ACCESSORIES

7.1 ACCESSORIES FOR 3-130S PUMP

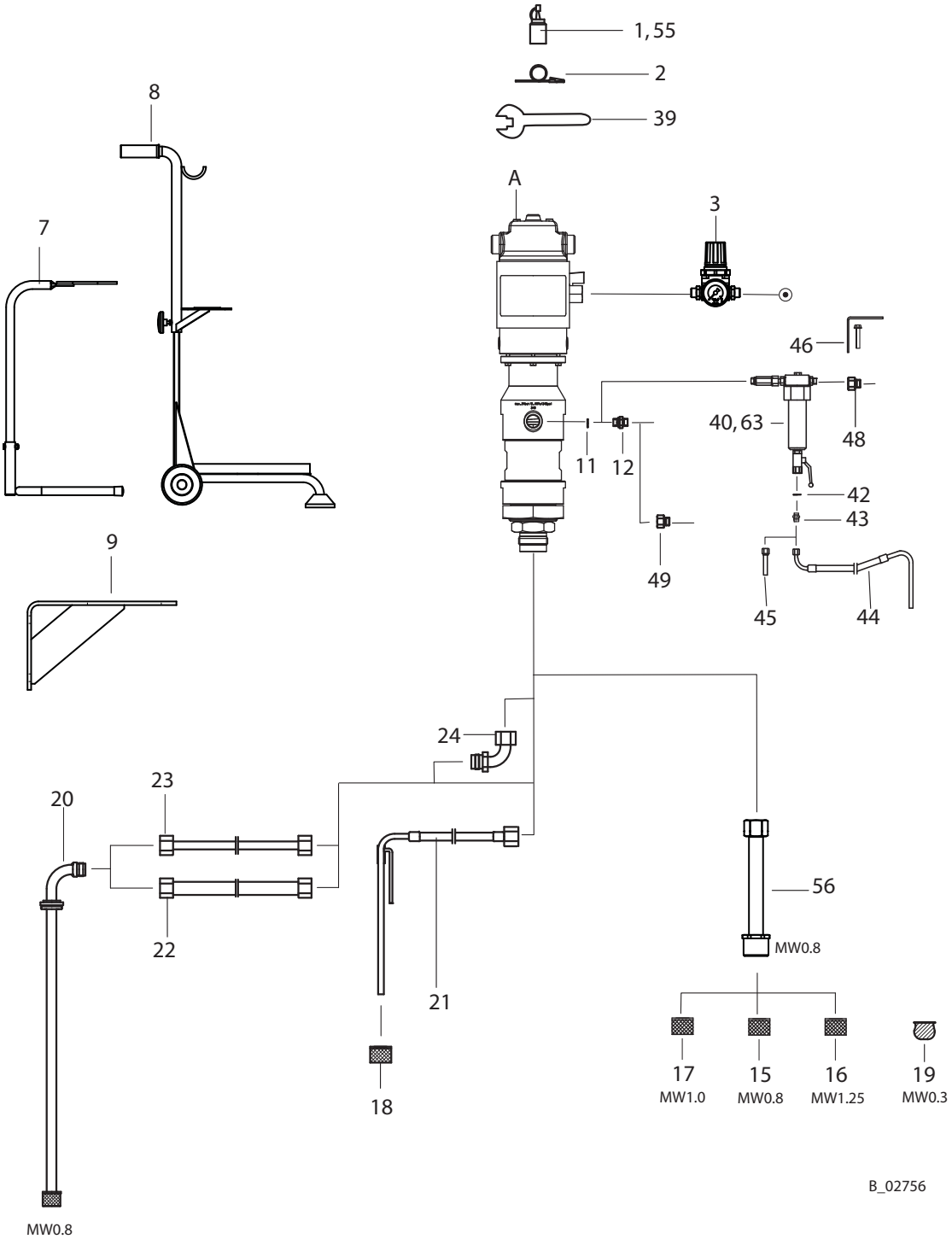

List accessories			**3-130S PE/TG**
Pos	**K**	**Description**	**Part No.**
A		Piston pump (the standard equipment includes pos. 1 (250 ml; 250 cc), pos. 2, pos. 11, pos. 12, pos. 39, pos. 48 and pos. 49)	2301845
1		Separating fluid 250 ml; 250 cc	9992504
2		Earthing cable assy. 3 m; 9.75 ft	236219
3	◆	Maintenance unit (Airless)	117270
7		Stand	115052
8		Pneumatic carriage	115082
9		Wall consumption assy.	115075
11	◆	Sealing ring A18x22x2.5	9925024
12		Reducing double nipple with 2 x 60°; G 3/8“ -NPSM 3/8“	367555
15	◆	Filter DN 25 mm; ID 1 inch, MW 0.8 mm, M28x1.5	250245
16	◆	Filter DN 25 mm; ID 1 inch, MW 1.25 mm, M28x1.5	250243
17	◆	Filter DN 25 mm; ID 1 inch, MW 1.0 mm, M28x1.5	344341
18	◆	Filter DN 13 mm; ID 0.5 inch, MW 0.8 mm, M15x1	250244
19	◆	Suction filter bag MW 0.3 mm	97531
20		Barrel suction pipe DN 25 mm; ID 1 inch	115175
21	◆	Suction hose flexible DN 13 mm; ID 0.5 inch	97073
22	◆	Extension hose DN 25 mm; ID 1 inch	115285
23	◆	Extension hose DN 13 mm; ID 0.5 inch	115284
24		Suction elbow M36x2	97075
39		Open-end wrench SW 41/ 46	115883
40		High-pressure filter HPF-3 NPSM 3/8“ (with ball valve made of steel)	367175
42	◆	Sealing ring AL	9974111
43		Double nipple G 3/8”- M20x2	367962
44	◆	Return hose DN 13 mm; ID 0.5 inch, M20x2 (incl. Pos. 42 + 43)	367189
45		Return tube HPF (incl. pos. 42 and pos. 43)	367188
46		Mounting for wall assy. for high-pressure filter (pos. 40)	367115
48		Adapter; NPSM 3/8“ I - NPSM 1/4“ A	367562
49		Adapter; NPSM 3/8“ I - M16x1.5 A	367563
55		Separating fluid 10 l; 2.6 gal	356940
56		Suction system 415 mm; 1.4 ft, DN 25 mm; ID 1 inch	105931
63		High-pressure filter HPF-3 NPSM 3/8“ (with ball valve made of stainless steel)	367178

◆ = Wearing part

7.2 ACCESSORIES FOR 22-18S PUMP

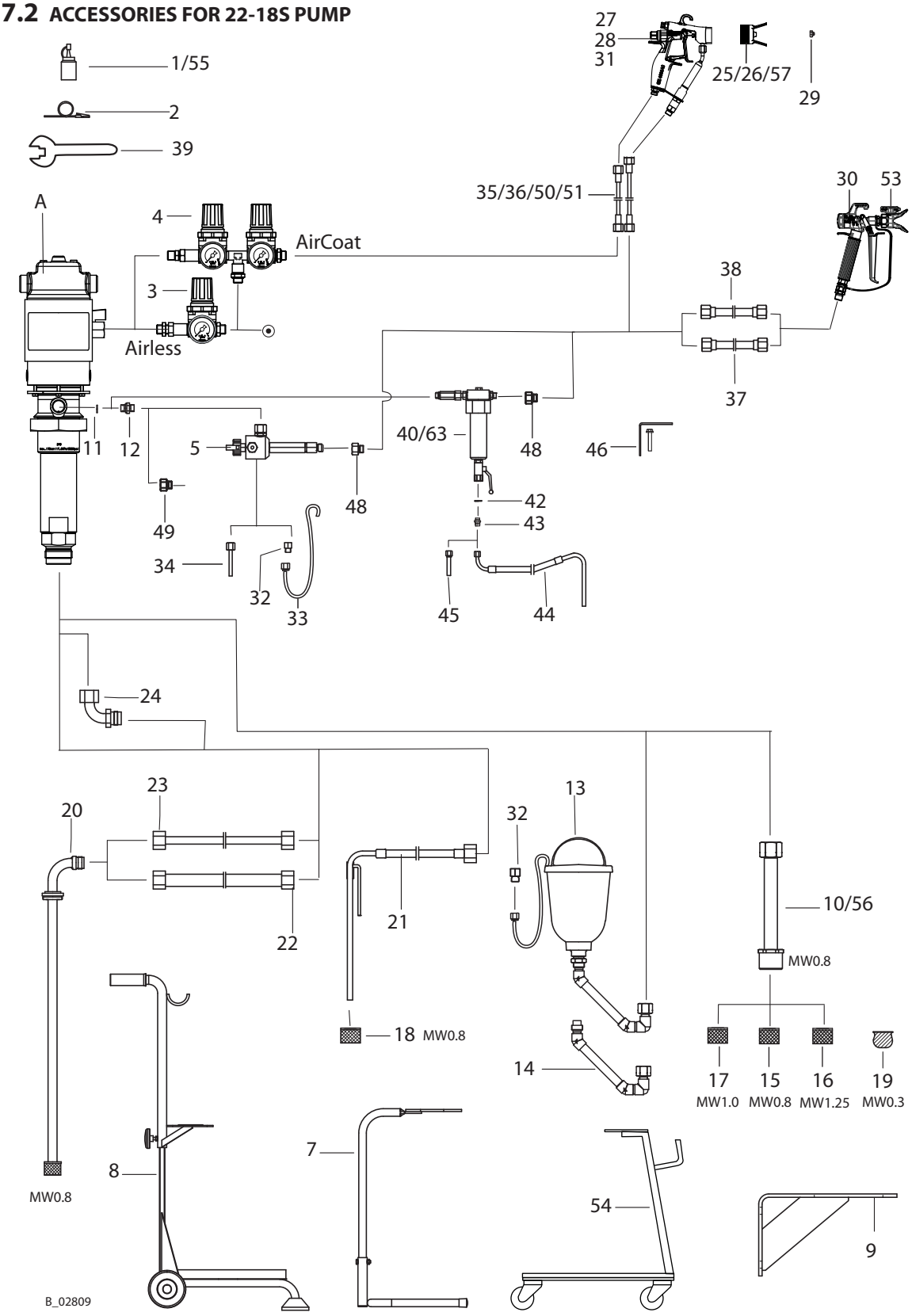

List accessories			**22-18S PE/TG**
Pos	**K**	**Description**	**Part No.**
A		Piston pump (the standard equipment includes pos. 1 (250 ml; 250 cc), pos. 2 , pos. 11, pos. 12, pos. 39, pos. 48 and pos. 49).	2301843
1		Separating fluid 250 ml; 250 cc	9992504
2		Earthing cable 3 m; 9.75 ft	236219
3	◆	Maintenance unit Airless	117270
4	◆	Maintenance unit AirCoat	117275
5		Filter-relief combination NPSM 3/8“-18	367135
7		Stand	115052
8		Pneumatic carriage	115082
9		Wall consumption assy.	115075
10		Suction system for stand 270 mm; 0.9 ft, DN 25 mm; ID 1 inch	105930
11	◆	Sealing ring A18x22x2.5	9925024
12		Reducing double nipple with 2 x 60°; G 3/8" -NPSM 3/8“	367555
13		Upper hopper set 5 l; 1.3 gal	367045
14		Suction elbow for pos. 13	366950
15	◆	Filter DN 25 mm; ID 1 inch, MW 0.8 mm, M28x1.5	250245
16	◆	Filter DN 25 mm; ID 1 inch, MW 1.25 mm, M28x1.5	250243
17	◆	Filter DN 25 mm; ID 1 inch, MW 1.0 mm, M28x1.5	344341
18	◆	Filter DN 13 mm; ID 0.5 inch, MW 0.8 mm, M15x1	250244
19	◆	Suction filter bag MW 0.3 mm	97531
20		Barrel suction pipe DN 25 mm; ID 1 inch	115175
21	◆	Suction hose flexible DN 13 mm; ID 0.5 inch	97073
22	◆	Extension hose DN 25 mm; ID 1 inch	115285
23	◆	Extension hose DN 13 mm; ID 0.5 inch	115284
24		Suction elbow M36x2	97075
25		Air cap LV (red = suitable for low viscosity paints)	394910
26		Air cap HV (blue = suitable for high viscosity paints)	394911
27		AC 4600 Pro (blue) with nozzle 11/40; 25 MPa; 250 bar; 3625 psi, NPSM 1/4“	394150
28		AC 4600 Pro (red) with nozzle 11/40; 25 MPa; 250 bar; 3625 psi, NPSM 1/4“	394151
29	◆	Nozzle ACF3000 -> see nozzle list in gun manual	379HHH...
30		Airless gun AG-14, NPSM 1/4“; 27 MPa; 270 bar; 3920 psi without TradeTip nozzle	502119
31		AC 4600 Pro (green) with nozzle 11/40; 25 MPa; 250 bar; 3625 psi, NPSM 1/4“	394152
32		Adapter M16-M20	118231
33	◆	Return tube	366290
34		Return tube (for pos. 5)	115858

◆ = Wearing part

List accessories			**22-18S PE/TG**
Pos	**K**	**Description**	**Part No.**
35	◆	Hose set material AC DN3, Air DN6, 7.5 m; 24.6 ft;	9984595
36	◆	Hose set material AC DN3, Air DN6, 10 m; 32.8 ft,	9984596
37	◆	High pressure hose Airless, 1/4 NPSM, DN 4 mm; ID 0.16 inch, 7.5 m; 24.6 ft, 27 MPa; 270 bar; 3920 psi	9984573
38	◆	High pressure hose Airless, 1/4 NPSM, DN 3 mm; ID 0.12 inch, 7.5 m; 24.6 ft, 27 MPa; 270 bar; 3920 psi	9984583
39		Open-end wrench SW 41/ 46	115883
40		High pressure filter HPF-3 NPSM 3/8“ with ball valve made of steel	367175
42	◆	Sealing ring AL	9974111
43		Double nipple G 3/8”- M20x2	367962
44	◆	Return hose DN 13 mm; ID 0.5 inch, M20x2 (incl. pos. 42 and pos. 43)	367189
45		Return tube HPF (incl. pos. 42 and pos. 43)	367188
46		Mounting for wall assy. for high pressure filter (pos. 40)	367115
48		Adapter; NPSM 3/8“ I -NPSM1/4“ A	367562
49		Adapter; NPSM 3/8“ I -M16x1.5 A	367563
50	◆	Hose set material AC DN4, Air DN6, 7.5 m; 24.6 ft;	2302378
51	◆	Hose set material AC DN4, Air DN6, 10 m; 32.8 ft,	2302379
53	◆	Wagner TradeTip nozzles, Selection table see paragraph 7.3	552xxx
54		Trolley assy. Star	105154
55		Separating fluid 10 l; 2.6 gal	356940
56		Suction system for trolley 415 mm; 1.4 ft, DN 25 mm; ID 1 inch	105931
57	◆	Air cap (green = small air requirement)	394912
63		High pressure filter HPF-3 NPSM 3/8“ with ball valve made of stainless steel	367178

◆ = Wearing part

7.3 SELECTION TABLE TRADETIP NOZZLES (AIRLESS)

Airless-nozzle list

Wagner
Trade Tip 2
to 270 bar
(27 MPa)



B_02818

without nozzle
F-thread (11/16 - 16 UN)
forWagner spray gun
Part No. 556042

without nozzle
G-thread (7/8 - 14 UNF)
for Graco/Titan spray gun
Part No. 556041

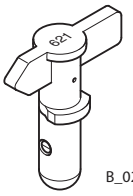

B_02819

Application		Nozzle mark	Spray angle	Holes inch / mm	Spray width mm [1]	Part No.
Natural paint	Spray gun filter „RED"	407	40°	0.007 / 0.18	160	552407
Transparent lacquer		507	50°	0.007 / 0.18	190	----------
Oils		209	20°	0.009 / 0.23	145	552209
		309	30°	0.009 / 0.23	160	552309
		409	40°	0.009 / 0.23	190	552409
		509	50°	0.009 / 0.23	205	552509
		609	60°	0.009 / 0.23	220	552609
Synthetic resin paints		111	10°	0.011 / 0.28	85	552111
PVC paint		211	20°	0.011 / 0.28	95	552211
		311	30°	0.011 / 0.28	125	552311
		411	40°	0.011 / 0.28	195	552411
		511	50°	0.011 / 0.28	215	552511
		611	60°	0.011 / 0.28	265	552611
Paint, undercoat	Spray gun filter „YELLOW"	113	10°	0.013 / 0.33	100	552113
Zinc chromate primer		213	20°	0.013 / 0.33	110	552213
Priming paint		313	30°	0.013 / 0.33	135	552313
Filler		413	40°	0.013 / 0.33	200	552413
		513	50°	0.013 / 0.33	245	552513
		613	60°	0.013 / 0.33	275	552613
		813	80°	0.013 / 0.33	305	552813
Filler		115	10°	0.015 / 0.38	90	552115
Spray primer		215	20°	0.015 / 0.38	100	552215
Rustproofing paint		315	30°	0.015 / 0.38	160	552315
		415	40°	0.015 / 0.38	200	552415
		515	50°	0.015 / 0.38	245	552515
		615	60°	0.015 / 0.38	265	552615
		715	70°	0.015 / 0.38	290	552715
		815	80°	0.015 / 0.38	325	552815
Spray primer	Spray gun filter „WHITE"	217	20°	0.017 / 0.43	110	552217
Rustproofing paint		317	30°	0.017 / 0.43	150	552317
Minium		417	40°	0.017 / 0.43	180	552417
Latex paint		517	50°	0.017 / 0.43	225	552517
		617	60°	0.017 / 0.43	280	552617
		717	70°	0.017 / 0.43	325	552717
		219	20°	0.019 / 0.48	145	552219
		319	30°	0.019 / 0.48	160	552319
		419	40°	0.019 / 0.48	185	552419
		519	50°	0.019 / 0.48	260	552519
		619	60°	0.019 / 0.48	295	552619
		719	70°	0.019 / 0.48	320	552719
		819	80°	0.019 / 0.48	400	552819
Mica paint		221	20°	0.021 / 0.53	145	552221
Zinc dust coating		421	40°	0.021 / 0.53	190	552421
Dispersions		521	50°	0.021 / 0.53	245	552521
		621	60°	0.021 / 0.53	290	552621
		821	80°	0.021 / 0.53	375	552821
Rustproofing paint		223	20°	0.023 / 0.58	155	552223
		423	40°	0.023 / 0.58	180	552423
		523	50°	0.023 / 0.58	245	552523
		623	60°	0.023 / 0.58	275	552623
		723	70°	0.023 / 0.58	325	552723
		823	80°	0.023 / 0.58	345	552823
Dispersions	Spray gun filter „GREEN"	225	20°	0.025 / 0.64	130	552225
Dispersion paint, distemper and filler paint		425	40°	0.025 / 0.64	190	552425
		525	50°	0.025 / 0.64	230	552525
		625	60°	0.025 / 0.64	250	552625
		825	80°	0.025 / 0.64	295	552825
		227	20°	0.027 / 0.69	160	552227
		427	40°	0.027 / 0.69	180	552427
		527	50°	0.027 / 0.69	200	552527
		627	60°	0.027 / 0.69	265	552627
		827	80°	0.027 / 0.69	340	552827
		629	60°	0.029 / 0.75	285	552629
		231	20°	0.031 / 0.79	155	552231
		431	40°	0.031 / 0.79	185	552431
		531	50°	0.031 / 0.79	220	552531
		631	60°	0.031 / 0.79	270	552631
		433	40°	0.033 / 0.83	220	552433
		235	20°	0.035 / 0.90	160	552235
		435	40°	0.035 / 0.90	195	552435
		535	50°	0.035 / 0.90	235	552535
		635	60°	0.035 / 0.90	295	552635
		839	80°	0.039 / 0.99	480	----------
Large-area paintwork		243	20°	0.043 / 1.10	185	552243
		543	50°	0.043 / 1.10	340	552543
		552	50°	0.052 / 1.30	350	552552

1) Jet width in mm; inches at a distance of 30 cm; 11.8 inches from the object and at a pressure of 10 MPa; 100 bar; 1450 psi, synthetic resin paint, 20 DIN4 seconds.

8 SPARE PARTS

8.1 HOW TO ORDER SPARE PARTS?

Always supply the following information to ensure delivery of the right spare part:

Part Number, description and quantity

The quantity need not be the same as the number given in the „Quantity" column. This number merely indicates how many of the respective parts are used in each subassembly.

The following information is also required to ensure smooth processing of your order:

- Address for the invoice
- Address for delivery
- Name of the person to be contacted in the event of any queries
- Type of delivery required (air freight or mail, sea route or overland route, etc.)

Marks in spare parts lists

Note to column „K" in the following spare parts lists.

◆ = Wearing parts
Note: No liability is assumed for wearing parts

● = Not part of standard equipment, available, however, as additional extra.



⚠WARNING

Incorrect maintenance/repair!
Danger to life and equipment damage

→ Only a WAGNER service center or a suitably trained person may carry out repairs and replace parts.
→ Only repair and replace parts that are listed in the chapter "Spare parts catalog".
→ Before all work on the unit and in the event of work interruptions:
- Disconnect the control unit from the mains.
- Relieve the pressure from the spray gun and unit.
- Secure the spray gun against actuation.
→ Observe the operating and service instructions when carrying out all work.

SIHI_0048_GB

8.2 OVER VIEWS MODULES

			3-130S PE+TG
Pos	**Description**	**Qty**	**Part No.**
A	Piston pump 3-130S assy.	1	2301845
1	Air motor NW75	1	105240
2	Material pump 130S	1	109141
3	Spring pin	1	9994226
4	Hexagon screw	6	9907216
5	Serrated washer	6	9922107
6	Protective stoppers	2	9999337
7	Sealing ring 18x22x2.5 Cu	1	9925024
8	Reducing double nipple 2 x 60°; A G 3/8“- A NPSM 3/8“	1	367556
9	Jam nut	1	9985571
10	Ball valve	1	9991112
11	Adapter I NPSM 3/8“- A NPSM 1/4“	1	367562
12	Adapter I NPSM 3/8“- A M16x1.5	1	367563
13	Earthing cable assy. 3 m; 9.84 ft	1	236219
14	Loctite 270, 50 ml; 50 cc	1	9992528

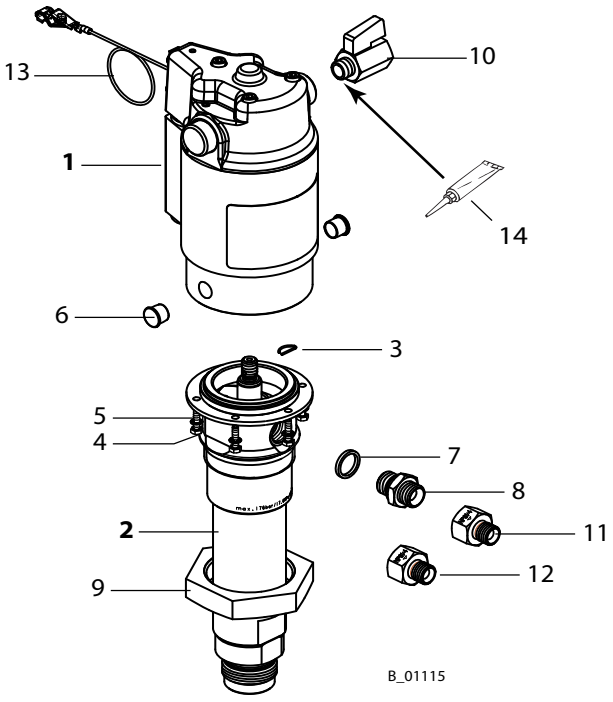

			22-18S PE+TG
Pos	**Description**	**Qty**	**Part No.**
A	Piston pump 22-18S assy.	1	2301843
1	Air motor NW75	1	105240
2	Material pump 18S	1	105150
3	Spring pin	1	105434
4	Hexagon screw	6	9907216
5	Serrated washer	6	9922107
6	Protective stoppers	2	9999337
7	Sealing ring 18x22x2.5 Cu	1	9925024
8	Reducing double nipple 2 x 60°; A G 3/8“- A NPSM 3/8“	1	367556
9	Jam nut	1	9985571
10	Ball valve	1	9991112
11	Adapter I NPSM 3/8“- A NPSM 1/4“	1	367562
12	Adapter I NPSM 3/8“- A M16x1.5	1	367563
13	Earthing cable assy. 3 m; 9.84 ft	1	236219
14	Loctite 270, 50 ml; 50 cc	1	9992528

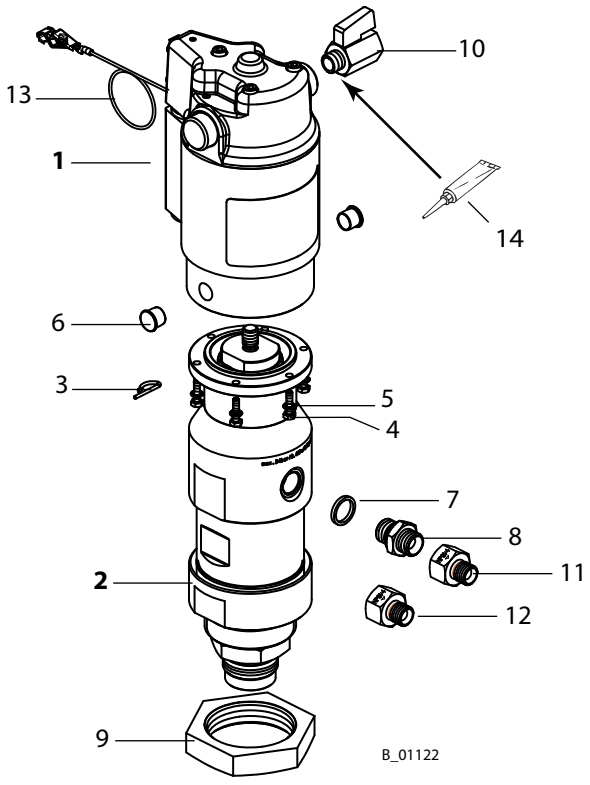

8.3 AIR MOTOR

8.3.1 AIR MOTOR NW75

⚠WARNING

Incorrect maintenance/repair!
Danger to life and equipment damage

→ Only a WAGNER service center or a suitably trained person may carry out repairs and replace parts.
→ Only repair and replace parts that are listed in the chapter "Spare parts catalog".
→ Before all work on the unit and in the event of work interruptions:
- Disconnect the control unit from the mains.
- Relieve the pressure from the spray gun and unit.
- Secure the spray gun against actuation.
→ Observe the operating and service instructions when carrying out all work.

SIHI_0048_GB

Pos	K	Qty	Part No.	Description
1		1	105240	Air motor NW 75 assy.
2	◆ ★	1	9972305	Collar seal
3		2	105322	Control socket
4	◆ ★	4	9971039	O-ring
5	◆ ★	5	9971036	O-ring
6		4	9903203	Oval head countersunk screws
7		1	105242	Cover assy.
8	◆	1	100333	Stop
9		1	9900710	Cap head screw with slit
10		1	9950103	Earthing point
11		2	9950513	Clamping strap
12		3	9900730	Cap head screw with slit
13		3	9921504	Spring ring
14		1	105321	Piston
15		1	100323	Washer
16		1	100343	Lower sleeve
17		1	100345	Compression spring
18		1	100344	Upper sleeve

◆ = Wearing part

★ = Included in service set Air motor

● = Included are not in the basic equipment, available, however, as additional extra

Air motor NW75

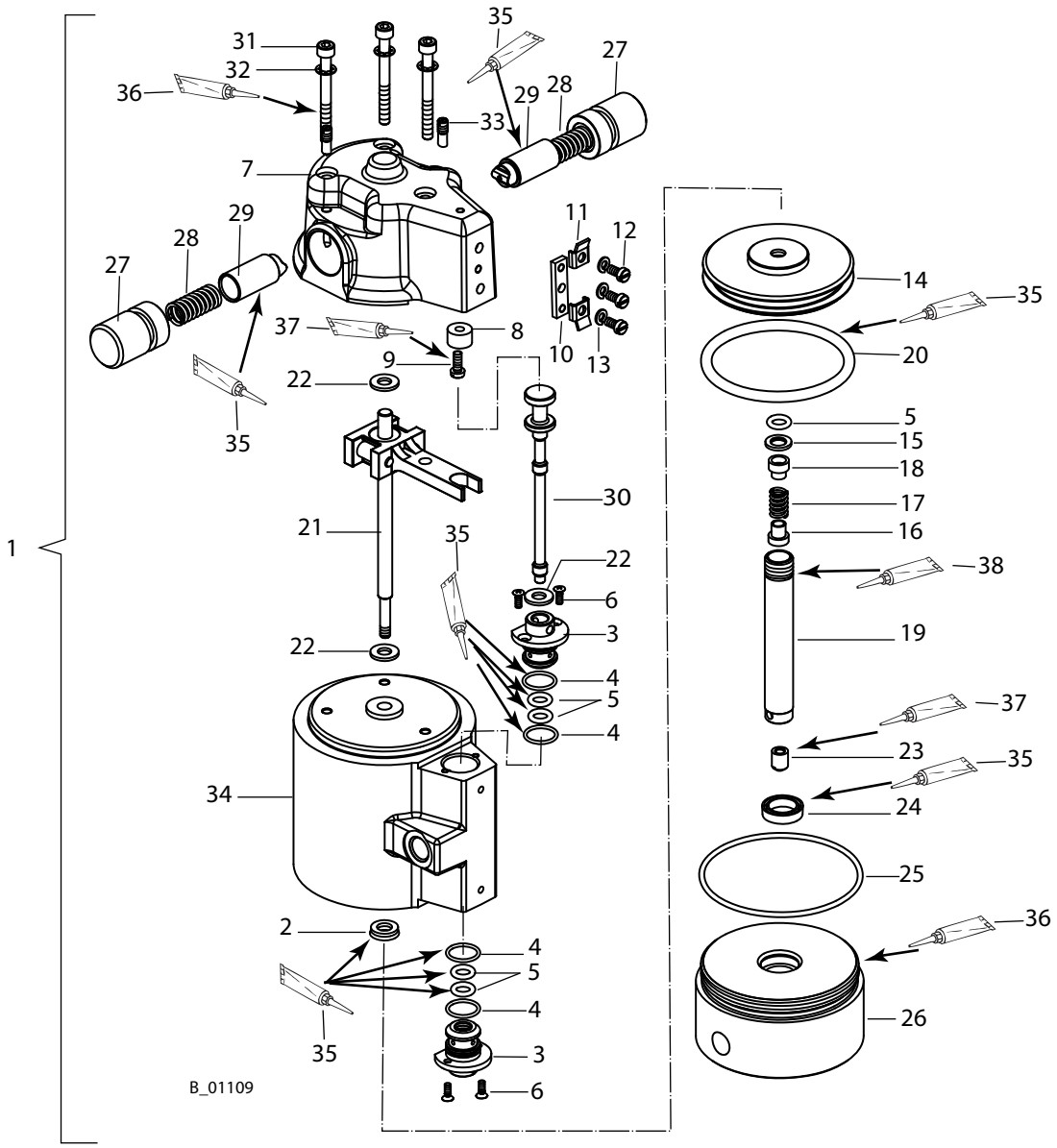

Pos	K	Qty	Part No.	Description
19		1	100321	Piston rod
20	◆ ★	1	9971074	O-ring
21	◆	1	100211	Drive coupler assy.
22	◆ ★	3	100326	Drive coupler
23		1	100356	Nut
24	◆ ★	1	9972304	Collar seal
25	◆ ★	1	9971075	O-ring
26		1	105314	Connecting piece
27		2	100335	Guide bush machined part
28		2	9994220	Compression spring
29	◆	2	100336	Conductor
30	◆	1	100328	Control piston
31		3	9900335	Hexagon socket head cap screw
32		3	9922106	Serrated washer
33		2	105312	Thread Pin
34		1	105204	Cylinder
35	●		9998808	Grease Beacon EP2
36	●		9992616	Molykote grease
37	●		9992590	Loctite 222, 50 ml; 50 cc
38	●		9992511	Loctite 243, 50 ml; 50 cc
	●	1	105711	Service-Set Air motor NW 75

◆ = Wearing part

★ = Included in service set Air motor

● = Included are not in the basic equipment, available, however, as additional extra

8.4 MATERIAL PUMP

8.4.1 MATERIAL PUMP 18S

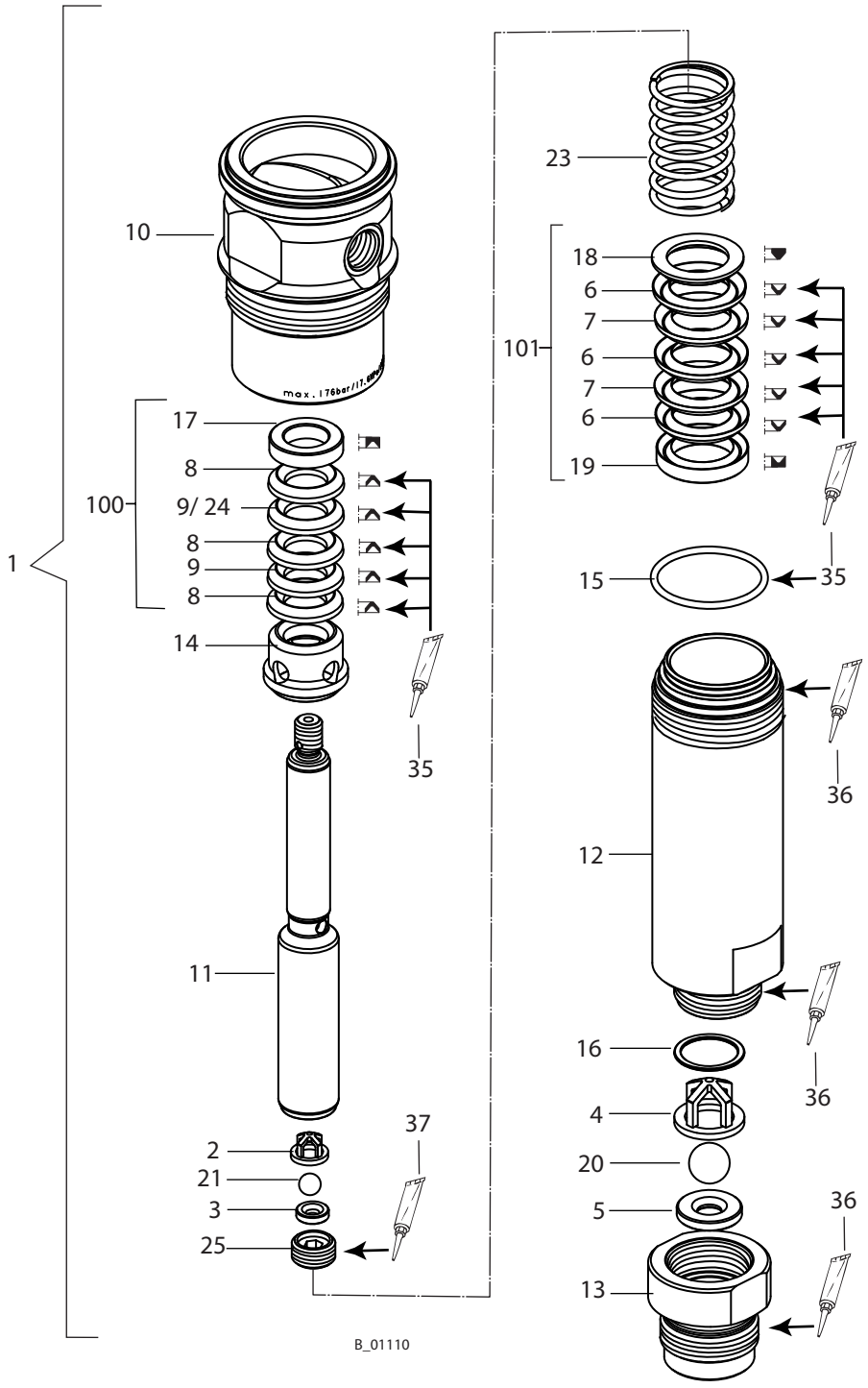



⚠ WARNING

Incorrect maintenance/repair!
Danger to life and equipment damage

→ Only a WAGNER service center or a suitably trained person may carry out repairs and replace parts.
→ Only repair and replace parts that are listed in the chapter "Spare parts catalog".
→ Before all work on the unit and in the event of work interruptions:
- Disconnect the control unit from the mains.
- Relieve the pressure from the spray gun and unit.
- Secure the spray gun against actuation.
→ Observe the operating and service instructions when carrying out all work.

SIHI_0048_GB

Spare parts list material pump 18S				**18 cm³ PE/TG**
Pos	**K**	**Qty**	**Description**	**Part No.**
1		1	Material pump 18S	105150
2	◆ ★	1	Ball guide-A	105426
3	◆	1	Valve seat	105427
4	◆ ★	1	Ball guide-E	105428
5	◆ ★	1	E-Valve seat	105429
6	◆ ★	3	Sealing collar PE 22.2/34	105510
7	◆ ★	2	Sealing collar TG 22.2/34	105511
8	◆ ★	3	Sealing collar PE 15.85/27.5	105512
9	◆ ★	2	Sealing collar TG 15.85/27.5	105513
10		1	Intermediate housing	105519
11	◆	1	Piston	105960
12		1	Intermediate piece	105522
13		1	Inlet housing	105523
14	◆ ★	1	Distance piece	105524
15	◆ ★	1	O-ring	105525
16		1	Washer	105528
17	★	1	Support ring	105531
18	★	1	Compression ring	105532
19	★	1	Support ring	105533

◆ = Wearing part

★ = Included in service set

● = Included are not in the basic equipment, available, however, as additional extra

Spare parts list material pump 18S				**18 cm³ PE/TG**
Pos	**K**	**Qty**	**Description**	**Part No.**
20	◆ ★	1	Ball	9941512
21	◆ ★	1	Ball	9941526
23		1	Pressure spring	9999304
25		1	Threaded ring	105425
100	◆	1	Packing compl. ../..	105980
101	◆	1	Packing compl. ../..	105981
35	●		Grease Beacon EP2	9998808
36	●		Molykote grease	9992616
37	●		Loctite 222 (50 ml; cc)	9992590
	●	1	Service-Set 18S PE+TG	105705

◆ = Wearing part

★ = Included in service set

● = Included are not in the basic equipment, available, however, as additional extra

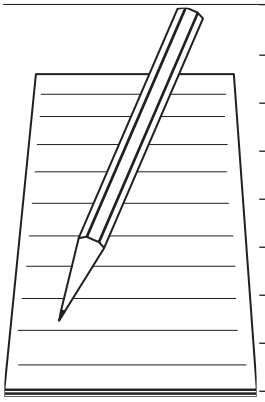

8.4.2 MATERIAL PUMP 130S



⚠WARNING

Incorrect maintenance/repair!
Danger to life and equipment damage

→ Only a WAGNER service center or a suitably trained person may carry out repairs and replace parts.
→ Only repair and replace parts that are listed in the chapter "Spare parts catalog".
→ Before all work on the unit and in the event of work interruptions:
- Disconnect the control unit from the mains.
- Relieve the pressure from the spray gun and unit.
- Secure the spray gun against actuation.
→ Observe the operating and service instructions when carrying out all work.

SIHI_0048_GB

Material pump 130 cm³ S				**130 cm³ PE/TG**
Pos	**K**	**Qty**	**Description**	**Part No.**
1		1	Material pump	109141
2	◆ ★	2	Securing ring	9922620
3	◆	1	Valve seat	109436
6		1	Union screw	109358
7	◆	1	Tube	109438
8		1	Cylinder	109360
9		1	Intermediate washer	109407
10	◆ ★	2	Sealing washer	109410
11		1	Compression spring	9994219
12	◆ ★	3	Sealing collar PE 42.4/54	109340
13	◆ ★	2	Sealing collar TG 42.4/54	109341
14	◆ ★	1	Support ring 42.4/54	109342
15	◆ ★	1	Compression ring 42.4/54	109343
16	◆ ★	2	Sealing collar PE 48.3/60	109344
17	◆ ★	1	Sealing collar TG 48.3/60	109345
18	◆ ★	1	Scraper ring PE 41/60	109346
19		1	Support ring 41/60	109347
20		1	Compression ring 41/60	109348

◆ = Wearing part

★ = Included in service set

● = Included are not in the basic equipment, available, however, as additional extra

Material pump 130 cm³ S

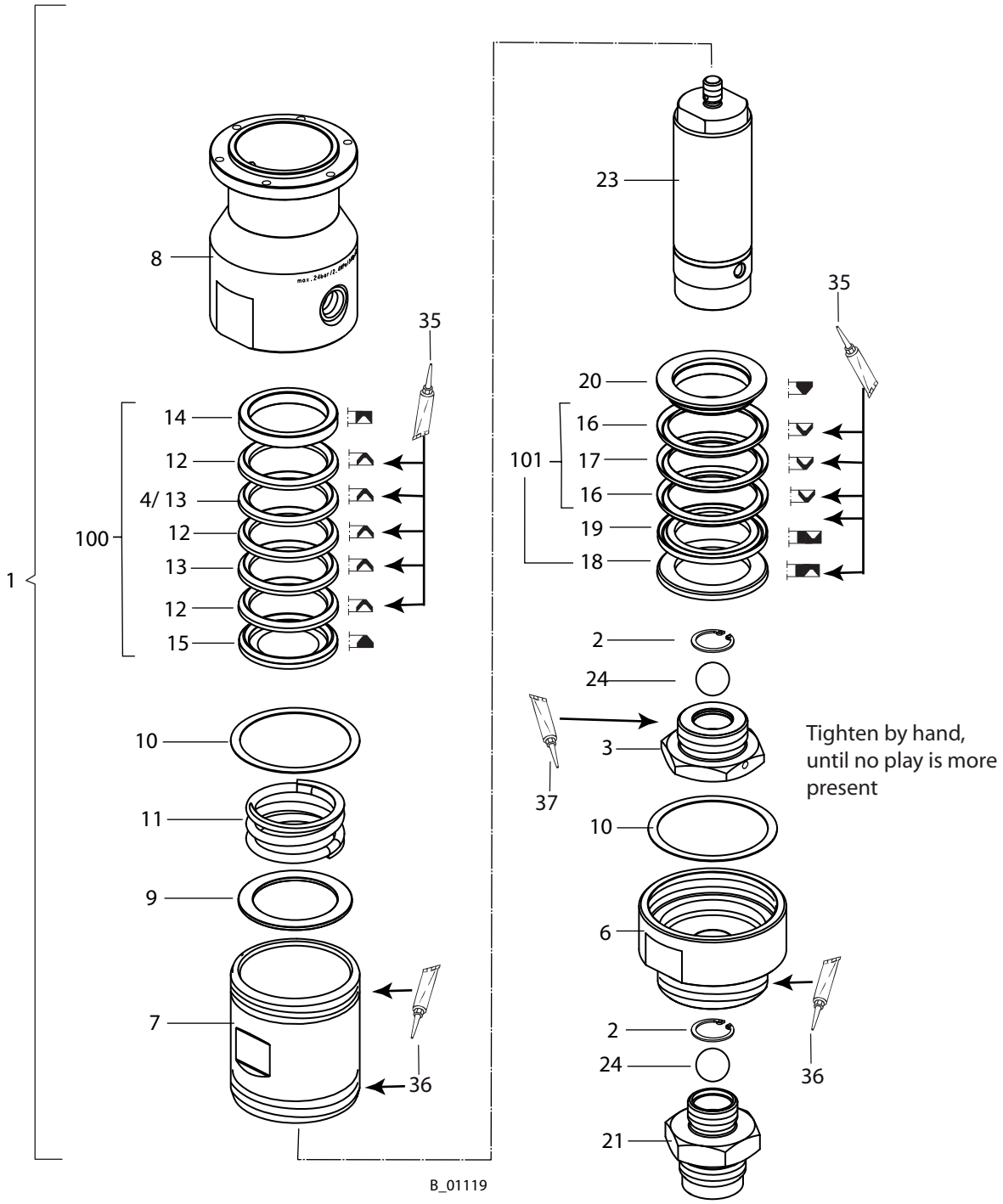

Material pump 130 cm³ S				**130 cm³ PE/TG**
Pos	**K**	**Qty**	**Description**	**Part No.**
21		1	Screw-in socket	109435
23	◆	1	Piston	109960
24	◆ ★	2	Ball	9941505
100	◆	1	Packing compl. ../..	109961
101	◆	1	Packing compl. ../..	109962
35	●		Grease Beacon EP2	9998808
36	●		Molykote grease	9992616
37	●		Loctite 222- 50 ml/cc	9992590
	●	1	Service-Set 130S PE+TG	109705

◆ = Wearing part

★ = Included in service set

● = Included are not in the basic equipment, available, however, as additional extra

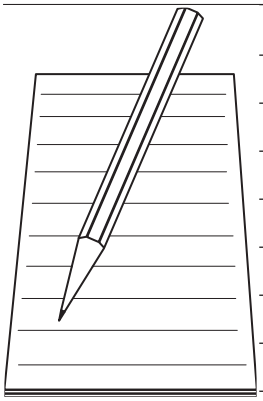

8.5 HIGH-PRESSURE FILTER

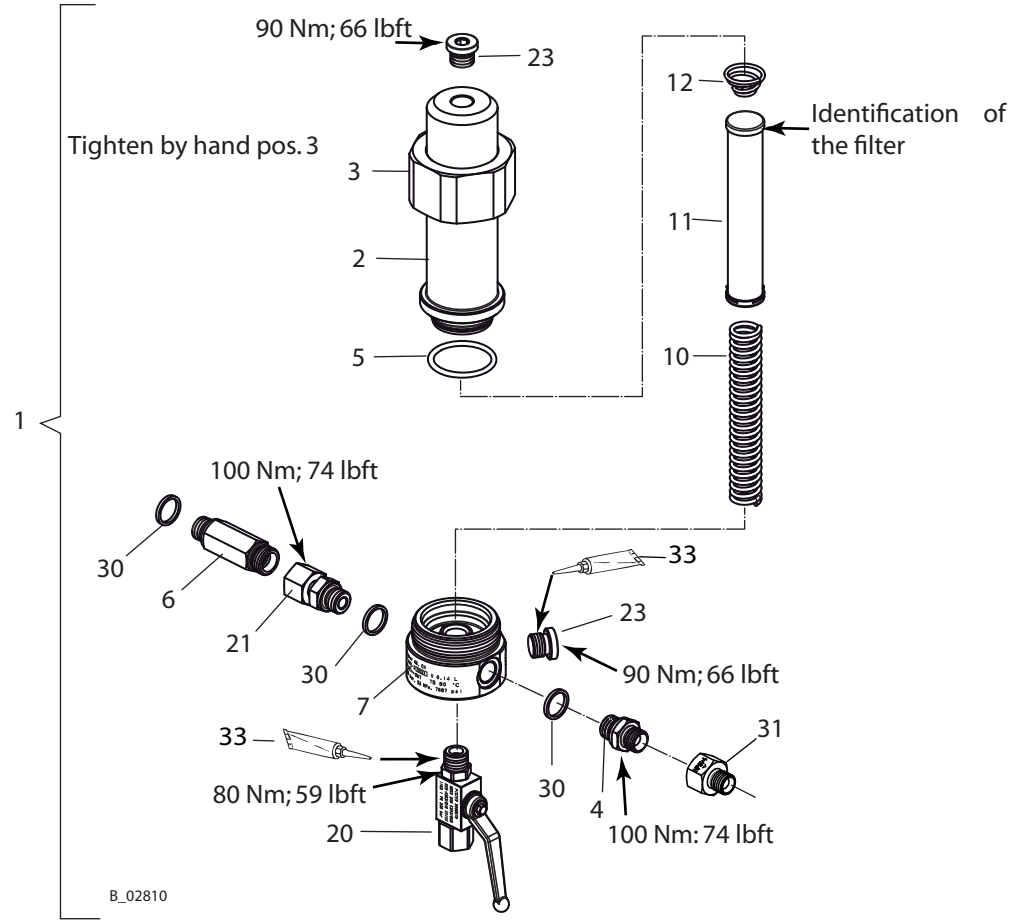

				Ball valve version in:	Steel	Stainless steel
Pos	**K**	**Qty**	**Description**		**Part No.**	**Part No.**
1			High-pressure filter HPF-3 3/8"		367175	367178
2		1	Filter housing		367911	
3		1	Union nut		367912	
4		1	Reducing double nipple with 2 x 60°		367556	
5	◆	1	O-ring		367914	
6		1	Screwed connector		367916	
7		1	Distribution housing		367910	
10		1	Filter support		9894245	

◆ = Wearing part

● = Included are not in the basic equipment, available, however, as additional extra

				Ball valve version in:	Steel	Stainless steel
Pos	**K**	**Qty**	**Description**		**Part No.**	**Part No.**
11	◆	1	Filter cartridges *			
			* Filter cartridge 200		295721	
			* Filter cartridge 100		3514068	
			* Filter cartridge 50		3514069	
			* Filter cartridge 20		291564	
12	◆	1	Cone spring		3514058	
20	◆	1	Ball valve		9998679	9999159
21		1	Screwed connecting piece		9998680	
23		2	Lock screw		9907127	
30	◆	3	Sealing ring		9925024	
31		1	Adapter I NPSM 3/8“- A NPSM 1/4“		367562	
33	●	1	Loctite 542 50 ml; 50 cc		9992831	

◆ = Wearing part

● = Included are not in the basic equipment, available, however, as additional extra



⚠WARNING

Incorrect maintenance/repair!
Danger to life and equipment damage

→ Only a WAGNER service center or a suitably trained person may carry out repairs and replace parts.
→ Only repair and replace parts that are listed in the chapter "Spare parts catalog".
→ Before all work on the unit and in the event of work interruptions:
- Disconnect the control unit from the mains.
- Relieve the pressure from the spray gun and unit.
- Secure the spray gun against actuation.
→ Observe the operating and service instructions when carrying out all work.

SIHI_0048_GB

8.6 FILTER-RELIEF COMBINATION

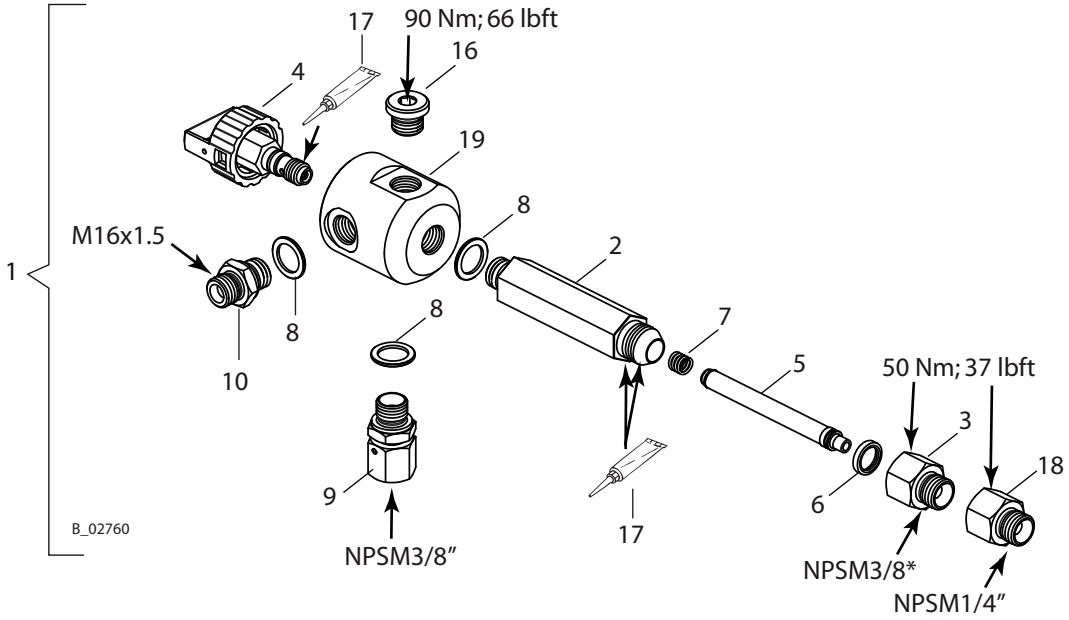

Pos	K	Qty	Part No.	Description
1			367135	Filter-relief combination
2		1	123469	Filter housing
3		1	367564	Adapter I=M20X1.5; A=NPSM 3/8"
4	◆	1	169248	Relief valve compl.
5	◆	1	–	Filter cartridge*
			34383	* 200 meshes (red)
			43235	* 100 meshes (yellow) (Standard)
			34377	* 50 meshes (white)
			89323	* 30 meshes (green)
6	◆	1	43303	Handle sealing washer
7	◆	1	43590	Compression spring
8	◆	3	9971525	Seal, U-Seal
9		1	367567	Swivel, assy.
10		1	123510	Double socket
16		1	9904312	Lock screw
17			9992609	Anti-sieze paste
18			367562	Adapter I=NPSM 3/8"; A=NPSM 1/4"
19		1	115199	Release housing

◆ = Wearing part

8.7 PRESSURE REGULATOR UNIT AIRLESS

Pos K	Qty	Part No.	Description
1	1	117270	Pressure regulator unit for Airless
2	1	117331	Double nipple
3	1	117332	Distance nipple
4	3	9970149	Sealing ring
5 ◆	1	114324	Manometer
6	1	117333	Double nipple
7	1	9970150	Sealing ring
8	1	114331	Safety valve
11	1	9992528	Loctite 270
12 ◆	1	117330	Regulator

◆ = Wearing part

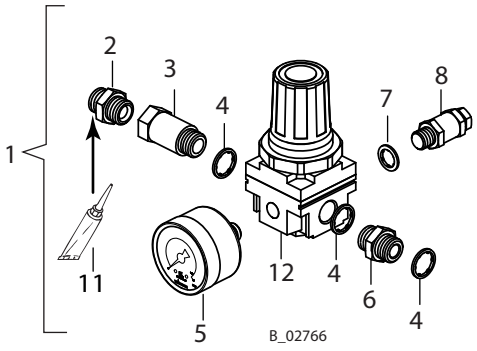

8.8 PRESSURE REGULATOR UNIT AIRCOAT

Pos K	Qty	Part No.	Description
1	1	117275	Pressure regulator unit for AirCoat
2	1	117331	Double nipple
3	1	117332	Distance nipple
4	5	9970149	Sealing ring
5 ◆	1	114324	Manometer
6	2	117333	Double nipple

◆ = Wearing part

Pos K	Qty	Part No.	Description
7	1	9970150	Sealing ring
8	1	114331	Safety valve
9	1	9985691	Fitting T-piece
10	1	117335	Manometer
11	1	9992528	Loctite 270
12 ◆	2	117330	Regulator

◆ = Wearing part

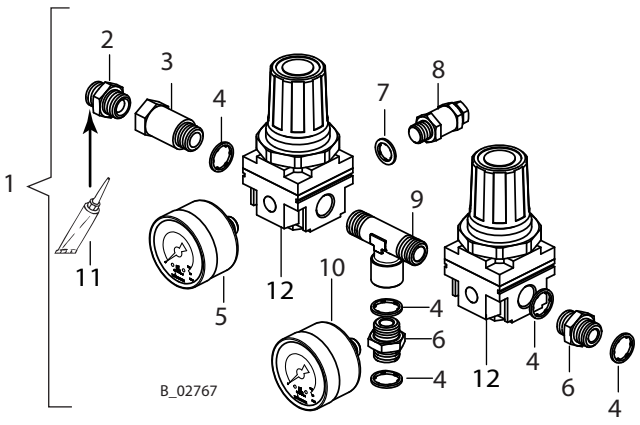

8.9 STAND

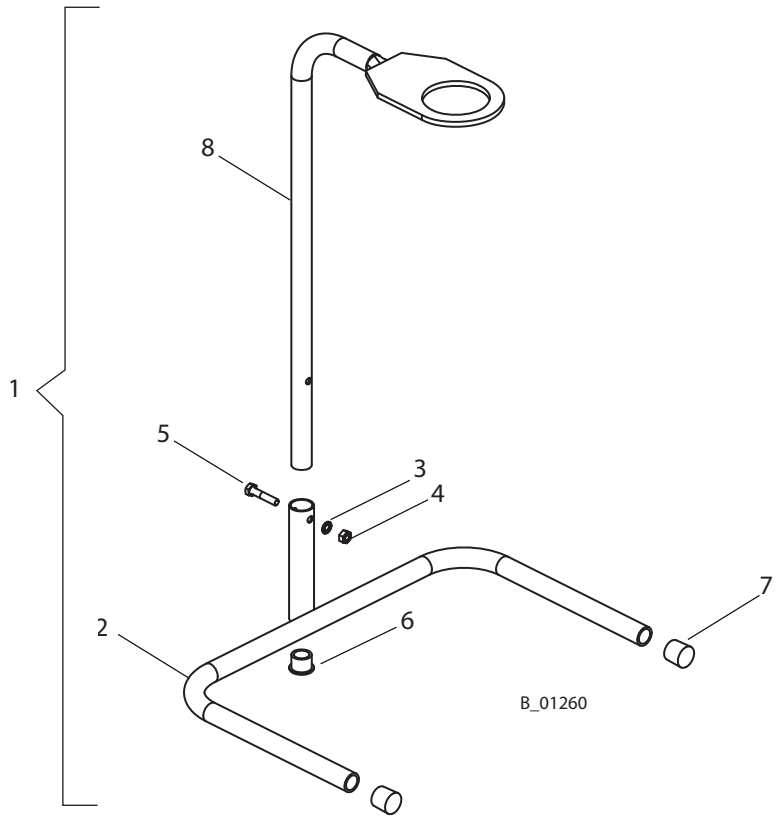

Pos	K	Qty	Part No.	Description
1		1	115052	Stand
2		1	105203	Lower part
3		1	9922109	Serrated washer
4		1	9910102	Hexagon nut
5		1	9900206	Hexagon screw
6	◆	1	9990809	Tube plug ribbed
7	◆	2	9990810	Tube cap
8		1	115053	Upper part

◆ = Wearing part

8.10 PNEUMATIC CARRIAGE

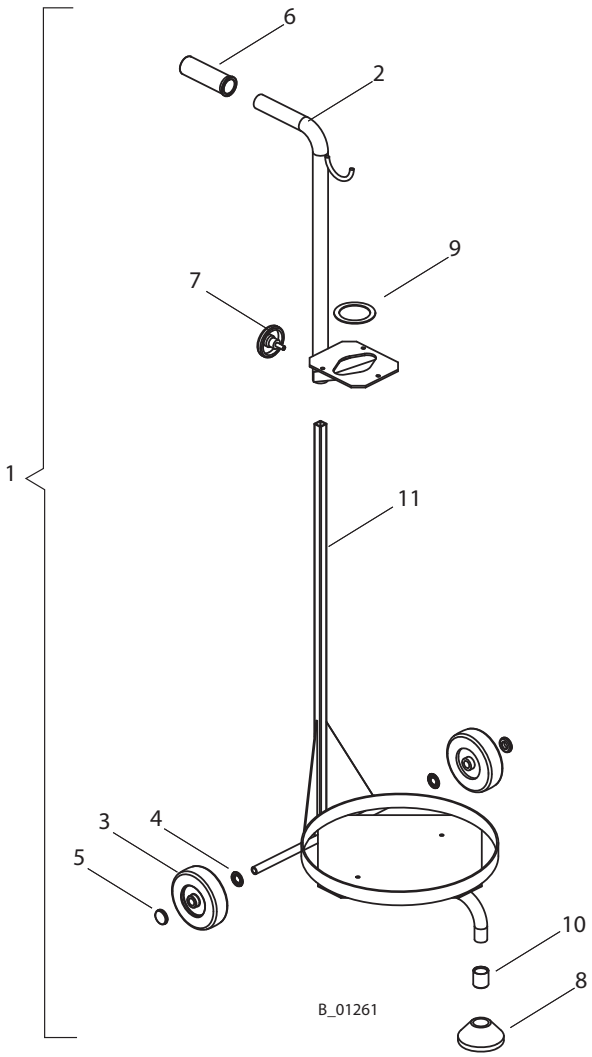

Pos	K	Qty	Part No.	Description
1		1	115082	Pneumatic carriage
2		1	115373	Upper frame
3	◆	2	9994924	Full rubber wheel
4	◆	2	9921710	Support ring
5	◆	2	9921711	Support ring with cap
6	◆	1	9994103	Handle
7	◆	1	9910512	Hand wheel Compact
8	◆	1	29774	Trolley foot
9		1	115744	Washer
10	◆	1	115756	Insert
11		1	115372	Trolley frame

◆ = Wearing part

8.11 PNEUMATIC CARRIAGE CH-STAR WITH UPPER HOPPER

Pos	K	Qty	Part No.	Description
1		1	2301843	Piston pump 22-18S PE+TG, Spare parts see chap. 8.2, 8.3 and 8.4.
2		1	935028	Adhesive label
3		4	9900342	Hexagon socket head cap screw
4		4	9910801	Cap nut
5		4	9925014	Serrated lock washer
6	◆	4	9999406	Single caster
7		1	3202492	Pipe double nipple
8		1	9992846	Angle 90 degrees
9		2	9992847	Angle 45 degrees
10		1	253426	Union nut
11		1	366955	Suction nipple
12		1	267313	Suction tube
13		1	55721	Inlet
14	◆	1	97560	Coating
15		1	9992833	Loctite 638 green
16		1	10722	Potential equalization cable compl.
17		1	104560	Tube
18	◆	1	105350	Valve housing
19	◆	1	105352	Sealing screw
20		1	350499	Screwed connector M16x1.5 RN 1/4
21		1	384116	Swivel, assy.
22		1	9930607	Center-grooved dowel pin
23		1	9992590	Loctite 222
24		1	9992616	Molykote DX grease
25		1	9992129	Bend elbow
26		1	128318	Nipple
27		1	128319	Union nut
28		2	115313	Filter reduction valve
29		2	9998677	Manometer D 40 0-1 MPa; 0-10 bar; 0-145 psi
30		1	9985691	Fitting T-piece
31		1	9983229	Fitting nipple
32		1	935049	Plug-in nipple 1/4“ external thread
33		1	9970150	Sealing ring
34		1	114331	Safety valve
35		1	9992528	Loctite 270

◆ = Wearing part

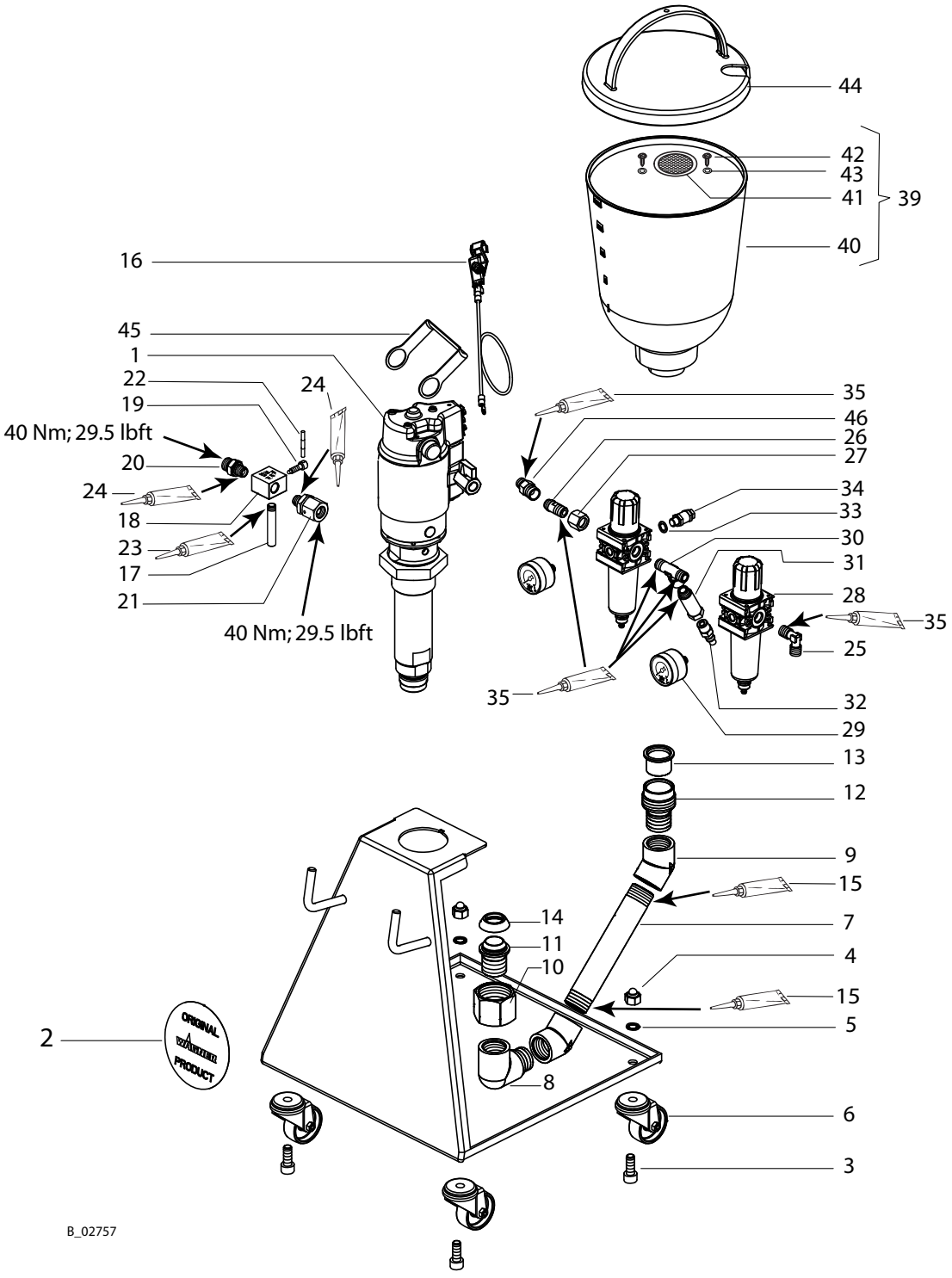
44
42
43
41
39
40
16
45
1
22
19
24
40 Nm; 29.5 lbft
20
24
18
23
17
21
40 Nm; 29.5 lbft
35
46
26
27
34
33
30
31
28
35
25
35
32
29
13
12
9
15
14
11
10
7
4
15
5
2
8
6
3
B_02757

Pos K	Qty	Part No.	Description
39	1	340265	Upper hopper with filter washer
40 ◆	1	340427	Upper hopper black
41 ◆	1	3756	Filter washer D 57
42	2	9902313	Cylinder self-tapping screw
43	2	9920314	Washer
44 ◆	1	340429	Cover
45	1	100338	Handle
46	1	9994628	Reducing double nipple with 2 x 90°

◆ = Wearing part

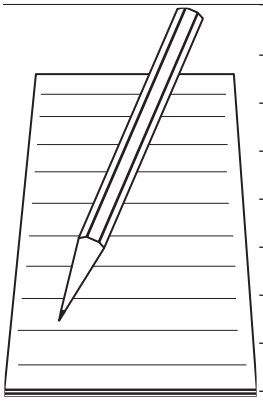

Germany J. WAGNER GmbH Otto-Lilienthal-Str. 18 Postfach 1120 D- 88677 Markdorf Telephone: ++49/ (0)7544 / 5050 Telefax: ++49/ (0)7544 / 505200 E-Mail:service.standard@wagner-group.com	**Switzerland** J. WAGNER AG Industriestrasse 22 Postfach 663 CH- 9450 Altstätten Telephone: ++41/ (0)71 / 757 2211 Telefax: ++41/ (0)71 / 757 2222 E-Mail: rep-ch@wagner-group.ch
Belgium WAGNER Spraytech Belgium BV Veilinglaan 58 B- 1861 Wolvertem Telephone: ++32/ (0)2 / 269 4675 Telefax: ++32/ (0)2 / 269 7845 E-Mail: info@wagner-wsb.eu	**Denmark** WAGNER Spraytech Scandinavia A/S Helgeshøj Allé 28 DK- 2630 Tåstrup Telephone: ++45/ 43 63 28 11 Telefax: ++45/ E-Mail wagner@wagner-group.dk
United Kingdom WAGNER Spraytech (UK) Ltd. The Coach House 2 Main Road GB- Middleton Cheney, OXON OX17 2ND Telephone: ++44/ (0)1295 / 714 202 Telefax: ++44/ (0)1295 / 710 100 E-Mail: enquiries@wagnerspraytech.co.uk	**France** J. WAGNER France S.A.R.L. 5, Ave. du 1er Mai – B.P. 47 F- 91122 Palaiseau-Cedex Telephone: ++33/ (0)1 / 60 11 40 50 Telefax: ++33/ (0)1 / E-Mail: division.batiment@wagner-france.fr
Netherlands WAGNER SPRAYTECH Nederland BV Zonnebaan 10 PO Box 1656 3606 CA Maarssenbroek Telephone: ++31/ (0)30 / 241 4155 Telefax: ++31/ (0)30 / 241 1787 E-Mail: info@wagner-wsb.eu	**Italy** WAGNER COLORA Via Ciucani, 3 I- 20060 Ornago (MI) Telephone: ++39/ 039 / 601 0474 Telefax: ++39/ 039 / 601 0601 E-Mail:
Australia WAGNER Spraytech Australia PTY.Ltd. 14-16 Kevlar Close Braeside, Vic. 3195 Telephone: 03 9587 2000 Telefax: E-Mail:	**Austria** J. WAGNER GmbH Lohnergasse 1 Postfach A- 1210 Wien Telephone: ++43/ (0)222/ 270 7781-0 national Telephone: ++43/ (0)1 / 270 7781-0 international E-Mail:
Sweden WAGNER Industrial Solutions Scandinavia AB Karbingatan 28 S- 25467 Helsingborg Telephone: ++46/ (0)42 150 020 Telefax: ++46/ (0)42 150 035 E-Mail: mailbox@wagner.se	**Spain** WAGNER Spraytech Iberica S.A. Ctra. N- 340, Km. 1245,4 E- 08750 Molins de Rei (Barcelona) Telephone: ++34/ (0)93/ 680 0028 Telefax: ++34/ (0)93/ 668 0156 E-Mail: info@wagnerspain.com
Ireland Mark John Ltd. 50 C Robinhood Industrial Estate Clondalkin Co. Dublin Telephone: 51 61 22 E-Mail:	**New Zealand** WAGNER Spraytech (NZ) Ltd. Auckland Office 308 Church Street Te Papapa, Auckland Telephone: (9) 641 169

WAGNER

DIN ISO 9001

WAGNER

CERTIFIED



Order number 2303668

Germany
J. WAGNER GmbH
Otto-Lilienthal-Str. 18
Postfach 1120
D- 88677 **Markdorf**
Telephone ++49/ (0)7544 / 5050
Telefax ++49/ (0)7544 / 505200
E-Mail: service.standard@wagner-group.com

Switzerland
J. WAGNER AG
Industriestrasse 22
Postfach 663
CH- 9450 **Altstätten**
Telephone ++41/ (0)71 / 757 2211
Telefax ++41/ (0)71 / 757 2222
E-Mail: rep-ch@wagner-group.ch

www.wagner-group.com